1. ALL RESISTANCE VALUES ARE IN OHMS, 0.1 WATT +/- 5%.
2. ALL CAPACITANCE VALUES ARE IN MICROFARADS.
3. ALL CRYSTALS & OSCILLATOR VALUES ARE IN HERTZ.

Tue Dec 21 17:27:23 2010

REV	ECN	DESCRIPTION OF REVISION	CK APPD / DATE
			2010-12-22

N92 SINGLE_BRD(MLB) REV C

PDF PAGE	CSA PAGE	CONTENTS	SYNC MASTER	DATE
1	1	TABLE OF CONTENTS	N/A	N/A
2	2	AP MAIN	N/A	N/A
3	3	AP GPIO,UART,SPI,I2S,I2C,SDIO	N/A	N/A
4	4	AP PWR	N/A	N/A
5	5	AP PWR(CONT.)	N/A	N/A
6	6	NAND & NOR	N/A	N/A
7	7	AP MIPI,DP,SMIA	N/A	N/A
8	8	AP TVOUT	N/A	N/A
9	9	L61 AUDIO INTERFACE	N/A	N/A
10	10	L61 HP	N/A	N/A
11	11	ASHLEY PMU	N/A	N/A
12	12	SIM,ACCEL,VIBE, GYRO, COMPASS	N/A	N/A
13	13	HIGHLAND PARK, SWITCHES	N/A	N/A
14	14	DOCK	N/A	N/A
15	15	NIMBUS, GRAPE, LCD CONN	N/A	N/A
16	16	CAMERA, STROBE, ALS,PROX	N/A	N/A
17	17	RADIO CONNECTIVITY	N/A	N/A
18	18	TEST POINTS	N/A	N/A

PART#	QTY	DESCRIPTION	REFERENCE DESIGNATOR(S)	CRITICAL	BOM OPTION
051-8296	1	N92_SCHEMATIC_TOP	SCH	Y	?
820-2766	1	N92_SINGLE_BOARD	PCB	Y	?

N92 EEE BOM LABELS

PART#	QTY	DESCRIPTION	REFERENCE DESIGNATOR(S)	CRITICAL	BOM OPTION
825-2029	1	EEE FOR 639-0558 (32G+SEMCO)	EEE_DC47	Y	SEM_FLASH_32GB
825-2029	1	EEE FOR 639-0559 (16G+SEMCO)	EEE_DC48	Y	SEM_FLASH_16GB
825-2029	1	EEE FOR 639-1195 (64G+SEMCO)	EEE_DD7Y	Y	SEM_FLASH_64GB
825-2029	1	EEE FOR 639-1200 (64G+MURATA)	EEE_DD90	Y	MUR_FLASH_64GB
825-2029	1	EEE FOR 639-1201 (32G+MURATA)	EEE_DD91	Y	MUR_FLASH_32GB
825-2029	1	EEE FOR 639-1202 (16G+MURATA)	EEE_DD92	Y	MUR_FLASH_16GB

BOARD - 820-2766
SCHEMATIC - 051-8296
MCO - 056-3382

BOM - 639-0558(32GB+SEMCO)
BOM - 639-0559(16GB+SEMCO)
BOM - 639-1195(64GB+SEMCO)
BOM - 639-1200(64GB+MURATA)
BOM - 639-1201(32GB+MURATA)
BOM - 639-1202(16GB+MURATA)

RADIO SUB-DESIGN ALTERNATES

PART NUMBER	ALTERNATE FOR PART NUMBER	BOM OPTION	REF DES	COMMENTS:
157S0068	157S0072	?	FL4_RF	PCS RX BALUN
197S0381	197S0361	?	G1_RF	WIFI/BT TCXO

RF COAX CONNECTOR BOM OPTIONS

PART#	QTY	DESCRIPTION	REFERENCE DESIGNATOR(S)	CRITICAL	BOM OPTION
518S0750	1	IPEX RF COAXIAL CONNECTOR	J3_RF	Y	RF_COAX_ALL
518S0750	1	IPEX RF COAXIAL CONNECTOR	J5_RF	Y	RF_COAX_ALL

POWER INDUCTOR ALTERNATES

PART NUMBER	ALTERNATE FOR PART NUMBER	BOM OPTION	REF DES	COMMENTS:
152S1172	152S0928	?	L2_PMU	IND ALTERNATE
152S1173	152S0979	?	L9	IND ALTERNATE
152S1051	152S0927	?	L7_PMU	IND ALTERNATE

WIFI BOM OPTIONS

PART#	QTY	DESCRIPTION	REFERENCE DESIGNATOR(S)	CRITICAL	BOM OPTION
339S0145	1	SEMCO MODULE	U12_RF	Y	SEMCO
339S0111	1	MURATA MODULE	U12_RF	Y	MURATA

PMU BOM OPTIONS

PART#	QTY	DESCRIPTION	REFERENCE DESIGNATOR(S)	CRITICAL	BOM OPTION
338S0867	1	PMU-A4	U48_PMU	Y	PMU_A4
338S0876	1	PMU-A5	U48_PMU	Y	PMU_A5

BB MEMORY BOM OPTIONS

PART#	QTY	DESCRIPTION	REFERENCE DESIGNATOR(S)	CRITICAL	BOM OPTION
341T0324	1	BASEBAND MEMORY SUB-ASSEMBLY	U2_RF	Y	BB_MEMORY_ALL

H3 BOM OPTION

PART#	QTY	DESCRIPTION	REFERENCE DESIGNATOR(S)	CRITICAL	BOM OPTION
339S0123	1	APPLICATION PROCESSOR WITH ELPIDA DDR	U52	Y	H3_ALL

RADIO RESET BUFFER BOM OPTION

PART#	QTY	DESCRIPTION	REFERENCE DESIGNATOR(S)	CRITICAL	BOM OPTION
311S0545	1	BUFFER FOR RADIO RESET	U11_RF	Y	RADIO_BUFFER_ALL

RADIO RESET BUFFER ALTERNATE

PART NUMBER	ALTERNATE FOR PART NUMBER	BOM OPTION	REF DES	COMMENTS:
311S0546	311S0545	?	U11_RF	TI ALTERNATE

VIDEO BUFFER ALTERNATE

PART NUMBER	ALTERNATE FOR PART NUMBER	BOM OPTION	REF DES	COMMENTS:
353S2684	353S2493	?	U9	INTERSIL ALTERNATE

PMU CRYSTAL ALTERNATE

PART NUMBER	ALTERNATE FOR PART NUMBER	BOM OPTION	REF DES	COMMENTS:
197S0329	197S0299	?	Y1_PMU	ITTI CRYSTAL
197S0369	197S0299	?	Y1_PMU	TXC CRYSTAL

LCD BL DRIVER ALTERNATE

PART NUMBER	ALTERNATE FOR PART NUMBER	BOM OPTION	REF DES	COMMENTS:
376S0769	376S0768	?	Q1_PMU	LCD BL FET DRIVER

POWER INDUCTORS

PART#	QTY	DESCRIPTION	REFERENCE DESIGNATOR(S)	CRITICAL	BOM OPTION
607-6809	1	POWER INDUCTORS	L1_PMU	Y	PMU_INDUCTORS
607-6809	1	POWER INDUCTORS	L3_PMU	Y	PMU_INDUCTORS
607-6809	1	POWER INDUCTORS	L16_PMU	Y	PMU_INDUCTORS
607-6809	1	POWER INDUCTORS	L18_PMU	Y	PMU_INDUCTORS

POWER INDUCTOR ALTERNATES

PART NUMBER	ALTERNATE FOR PART NUMBER	BOM OPTION	REF DES	COMMENTS:
607-6810	607-6809	?	L1_PMU	DIRECTIONAL ALTERNATES
607-6810	607-6809	?	L3_PMU	DIRECTIONAL ALTERNATES
607-6810	607-6809	?	L16_PMU	DIRECTIONAL ALTERNATES
607-6810	607-6809	?	L18_PMU	DIRECTIONAL ALTERNATES

DDR ALTERNATES

PART NUMBER	ALTERNATE FOR PART NUMBER	BOM OPTION	REF DES	COMMENTS:
339S0126	339S0123	?	U52	HYNIX 46NM
339S0136	339S0123	?	U52	SEC 54NM

CHOKE ALTERNATES

PART NUMBER	ALTERNATE FOR PART NUMBER	BOM OPTION	REF DES	COMMENTS:
155S0623	155S0310	?	L1	90 OHM CMC
155S0623	155S0310	?	L2	90 OHM CMC

32K ALTERNATES

PART NUMBER	ALTERNATE FOR PART NUMBER	BOM OPTION	REF DES	COMMENTS:
197S0392	197S0299	?	Y1_PMU	32K ALTERNATE

THERMISTOR ALTERNATES

PART NUMBER	ALTERNATE FOR PART NUMBER	BOM OPTION	REF DES	COMMENTS:
107S0146	107S0117	?	R4_PMU	THERMISTOR ALTERNATE
107S0146	107S0117	?	R7_PMU	THERMISTOR ALTERNATE
107S0146	107S0117	?	R5_PMU	THERMISTOR ALTERNATE
107S0146	107S0117	?	R2_PMU	THERMISTOR ALTERNATE
107S0150	107S0117	?	R4_PMU	THERMISTOR ALTERNATE
107S0150	107S0117	?	R7_PMU	THERMISTOR ALTERNATE
107S0150	107S0117	?	R5_PMU	THERMISTOR ALTERNATE
107S0150	107S0117	?	R2_PMU	THERMISTOR ALTERNATE

10UF CAP ALTERNATES

PART NUMBER	ALTERNATE FOR PART NUMBER	BOM OPTION	REF DES	COMMENTS:
138S0678	138S0679	?	C17	10UF CAP ALTNERATE
138S0678	138S0679	?	C78	10UF CAP ALTNERATE

90-OHM CMC ATERNATE

PART NUMBER	ALTERNATE FOR PART NUMBER	BOM OPTION	REF DES	COMMENTS:
155S0460	155S0583	?	L7	90-OHM CMC ALT
155S0460	155S0583	?	L13	90-OHM CMC ALT
155S0460	155S0583	?	L14	90-OHM CMC ALT
155S0460	155S0583	?	L15	90-OHM CMC ALT
155S0460	155S0583	?	L16	90-OHM CMC ALT

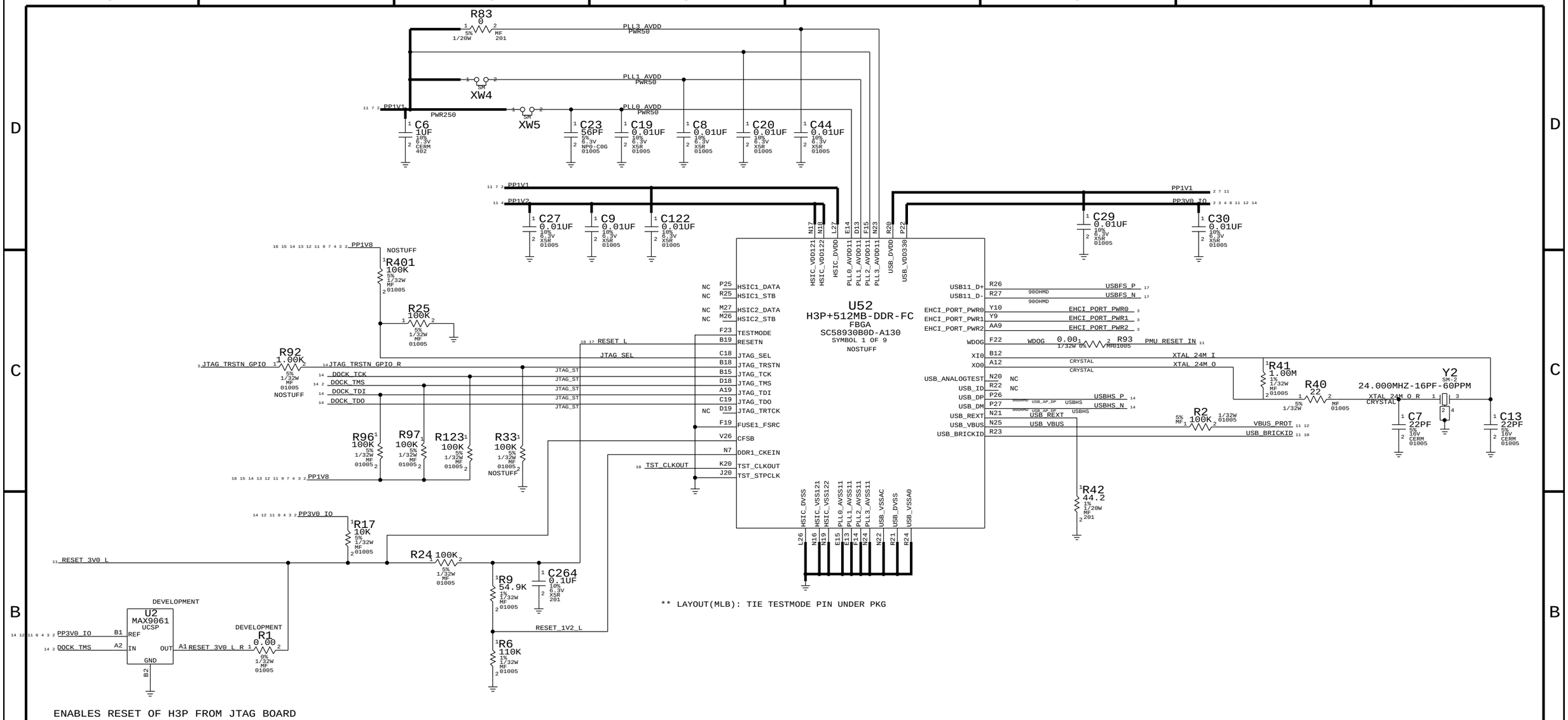

ENABLES RESET OF H3P FROM JTAG BOARD

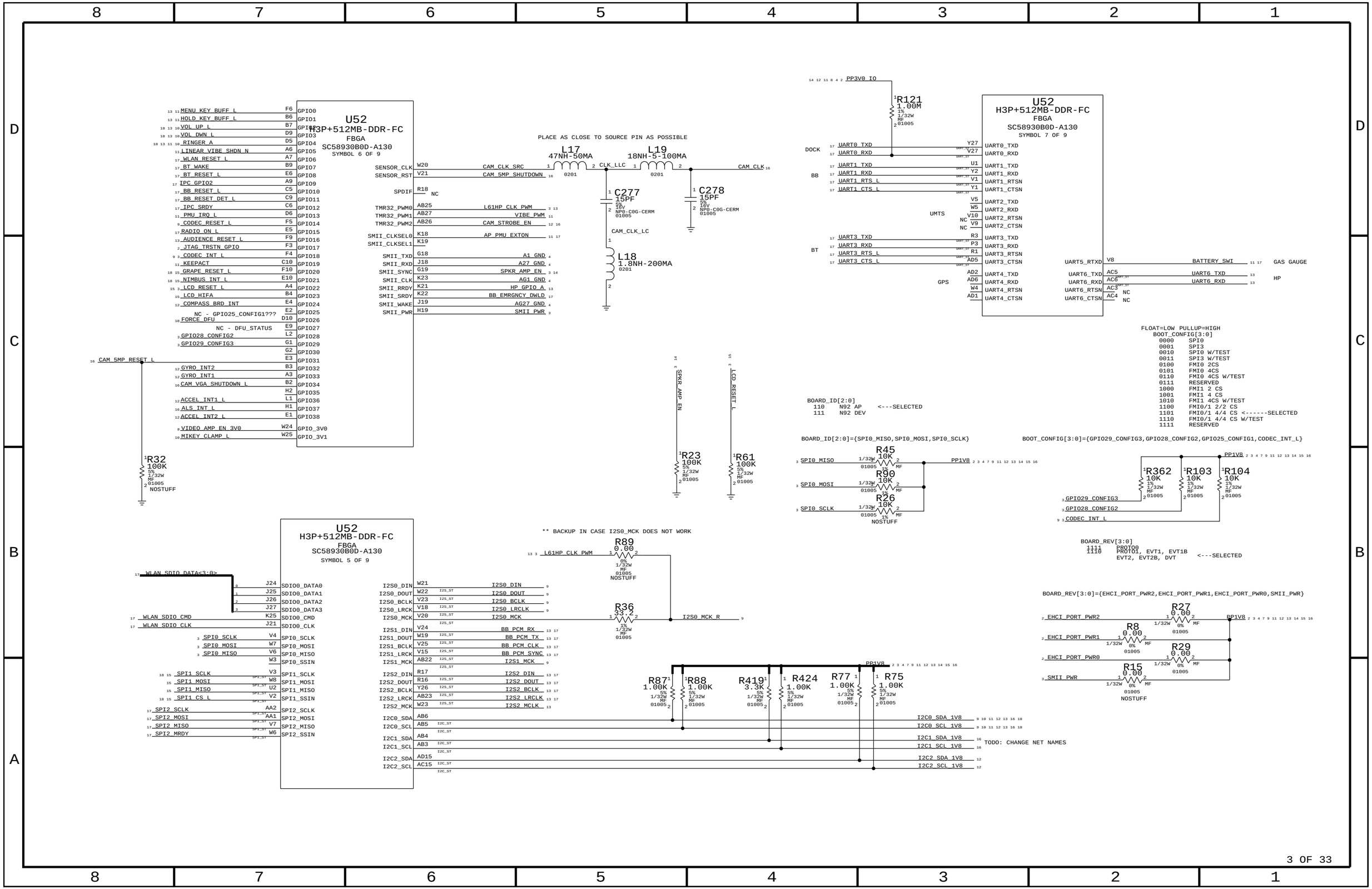
U52
H3P+512MB-DDR-FC
FBGA
SC58930B0D-A130
SYMBOL 6 OF 9
MENU_KEY_BUFF_L
HOLD_KEY_BUFF_L
VOL_UP_L
VOL_DWN_L
RINGER_A
LINEAR_VIBE_SHDN_N
WLAN_RESET_L
BT_WAKE
BT_RESET_L
IPC_GPIO2
BB_RESET_L
BB_RESET_DET_L
IPC_SRDY
PMU_IRQ_L
CODEC_RESET_L
RADIO_ON_L
AUDIENCE_RESET_L
JTAG_TRSTN_GPIO
CODEC_INT_L
KEEPACT
GRAPE_RESET_L
NIMBUS_INT_L
LCD_RESET_L
LCD_HIFA
COMPASS_BRD_INT
NC - GPIO25_CONFIG1???
FORCE_DFU
NC - DFU_STATUS
GPIO28_CONFIG2
GPIO29_CONFIG3
CAM_5MP_RESET_L
GYRO_INT2
GYRO_INT1
CAM_VGA_SHUTDOWN_L
ACCEL_INT1_L
ALS_INT_L
ACCEL_INT2_L
VIDEO_AMP_EN_3V0
MIKEY_CLAMP_L
SENSOR_CLK
SENSOR_RST
SPDIF
NC
TMR32_PWM0
TMR32_PWM1
TMR32_PWM2
SMII_CLKSEL0
SMII_CLKSEL1
SMII_TXD
SMII_RXD
SMII_SYNC
SMII_CLK
SMII_RRDY
SMII_SRDY
SMII_WAKE
SMII_PWR
CAM_CLK_SRC
CAM_5MP_SHUTDOWN
L61HP_CLK_PWM
VIBE_PWM
CAM_STROBE_EN
AP_PMU_EXTON
A1_GND
A27_GND
SPKR_AMP_EN
AG1_GND
HP_GPIO_A
BB_EMRGNCY_DWLD
AG27_GND
SMII_PWR
PLACE AS CLOSE TO SOURCE PIN AS POSSIBLE
L17
47NH-50MA
0201
CLK_LLC
L19
18NH-5-100MA
0201
CAM_CLK
C277
15PF
5%
16V
NP0-C0G-CERM
01005
C278
15PF
5%
16V
NP0-C0G-CERM
01005
CAM_CLK_LC
L18
1.8NH-200MA
0201
R32
100K
5%
1/32W
MF
01005
NOSTUFF
SPKR_AMP_EN
LCD_RESET_L
R23
100K
5%
1/32W
MF
01005
R61
100K
5%
1/32W
MF
01005
PP3V0_IO
R121
1.00M
1%
1/32W
MF
01005
U52
H3P+512MB-DDR-FC
FBGA
SC58930B0D-A130
SYMBOL 7 OF 9
DOCK
UART0_TXD
UART0_RXD
BB
UART1_TXD
UART1_RXD
UART1_RTS_L
UART1_CTS_L
UART1_TXD
UART1_RXD
UART1_RTSN
UART1_CTSN
UMTS
UART2_TXD
UART2_RXD
UART2_RTSN
UART2_CTSN
NC
NC
BT
UART3_TXD
UART3_RXD
UART3_RTS_L
UART3_CTS_L
UART3_TXD
UART3_RXD
UART3_RTSN
UART3_CTSN
GPS
UART4_TXD
UART4_RXD
UART4_RTSN
UART4_CTSN
UART5_RTXD
UART6_TXD
UART6_RXD
UART6_RTSN
UART6_CTSN
BATTERY_SWI
GAS GAUGE
UART6_TXD
UART6_RXD
HP
NC
NC
FLOAT=LOW PULLUP=HIGH
BOOT_CONFIG[3:0]
0000 SPI0
0001 SPI3
0010 SPI0 W/TEST
0011 SPI3 W/TEST
0100 FMI0 2CS
0101 FMI0 4CS
0110 FMI0 4CS W/TEST
0111 RESERVED
1000 FMI1 2 CS
1001 FMI1 4 CS
1010 FMI1 4CS W/TEST
1100 FMI0/1 2/2 CS
1101 FMI0/1 4/4 CS <------SELECTED
1110 FMI0/1 4/4 CS W/TEST
1111 RESERVED
BOARD_ID[2:0]
110 N92 AP <---SELECTED
111 N92 DEV
BOARD_ID[2:0]={SPI0_MISO,SPI0_MOSI,SPI0_SCLK}
BOOT_CONFIG[3:0]={GPIO29_CONFIG3,GPIO28_CONFIG2,GPIO25_CONFIG1,CODEC_INT_L}
SPI0_MISO
SPI0_MOSI
SPI0_SCLK
R45
10K
1/32W
1%
MF
01005
R90
10K
1/32W
1%
MF
01005
R26
10K
1/32W
1%
MF
01005
NOSTUFF
PP1V8
R362
10K
1%
1/32W
MF
01005
R103
10K
1%
1/32W
MF
01005
R104
10K
1%
1/32W
MF
01005
GPIO29_CONFIG3
GPIO28_CONFIG2
CODEC_INT_L
BOARD_REV[3:0]
1111 PROT00
1110 PROT01, EVT1, EVT1B
EVT2, EVT2B, DVT <---SELECTED
BOARD_REV[3:0]={EHCI_PORT_PWR2,EHCI_PORT_PWR1,EHCI_PORT_PWR0,SMII_PWR}
EHCI_PORT_PWR2
EHCI_PORT_PWR1
EHCI_PORT_PWR0
SMII_PWR
R27
0.00
1/32W
0%
MF
01005
R8
0.00
1/32W
0%
MF
01005
R29
0.00
1/32W
0%
MF
01005
R15
0.00
1/32W
0%
MF
01005
NOSTUFF
U52
H3P+512MB-DDR-FC
FBGA
SC58930B0D-A130
SYMBOL 5 OF 9
WLAN_SDIO_DATA<3:0>
SDIO0_DATA0
SDIO0_DATA1
SDIO0_DATA2
SDIO0_DATA3
WLAN_SDIO_CMD
WLAN_SDIO_CLK
SDIO0_CMD
SDIO0_CLK
SPI0_SCLK
SPI0_MOSI
SPI0_MISO
SPI0_SSIN
SPI1_SCLK
SPI1_MOSI
SPI1_MISO
SPI1_CS_L
SPI1_SSIN
SPI2_SCLK
SPI2_MOSI
SPI2_MISO
SPI2_MRDY
SPI2_SSIN
I2S0_DIN
I2S0_DOUT
I2S0_BCLK
I2S0_LRCK
I2S0_MCK
I2S1_DIN
I2S1_DOUT
I2S1_BCLK
I2S1_LRCK
I2S1_MCK
I2S2_DIN
I2S2_DOUT
I2S2_BCLK
I2S2_LRCK
I2S2_MCK
I2C0_SDA
I2C0_SCL
I2C1_SDA
I2C1_SCL
I2C2_SDA
I2C2_SCL
** BACKUP IN CASE I2S0_MCK DOES NOT WORK
R89
0.00
0%
1/32W
MF
01005
NOSTUFF
L61HP_CLK_PWM
R36
33.2
1%
1/32W
MF
01005
I2S0_MCK_R
BB_PCM_RX
BB_PCM_TX
BB_PCM_CLK
BB_PCM_SYNC
I2S1_MCK
I2S2_DIN
I2S2_DOUT
I2S2_BCLK
I2S2_LRCLK
I2S2_MCLK
R87
1.00K
R88
1.00K
R419
3.3K
R424
1.00K
R77
1.00K
R75
1.00K
5%
1/32W
MF
01005
PP1V8
I2C0_SDA_1V8
I2C0_SCL_1V8
I2C1_SDA_1V8
I2C1_SCL_1V8
I2C2_SDA_1V8
I2C2_SCL_1V8
TODO: CHANGE NET NAMES

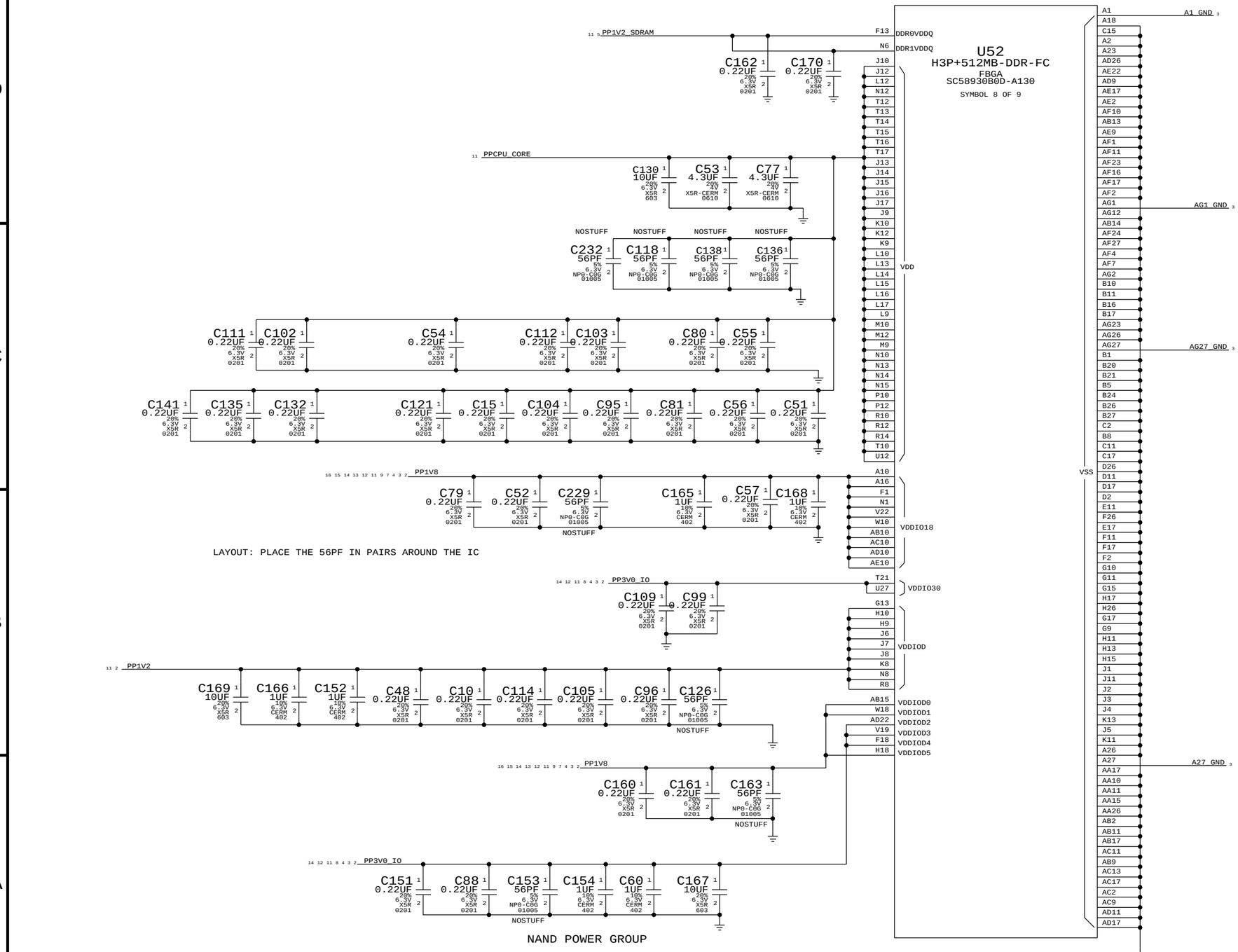
U52
H3P+512MB-DDR-FC
FBGA
SC58930B0D-A130
SYMBOL 8 OF 9
PP1V2_SDRAM
PPCPU_CORE
PP1V8
PP3V0_IO
PP1V2
DDR0VDDQ
DDR1VDDQ
VDD
VDDIO18
VDDIO30
VDDIOD
VDDIOD0
VDDIOD1
VDDIOD2
VDDIOD3
VDDIOD4
VDDIOD5
VSS
A1 GND
AG1 GND
AG27 GND
A27 GND
NOSTUFF
LAYOUT: PLACE THE 56PF IN PAIRS AROUND THE IC
NAND POWER GROUP

PLACE THE 56PF IN PAIRS AROUND THE IC

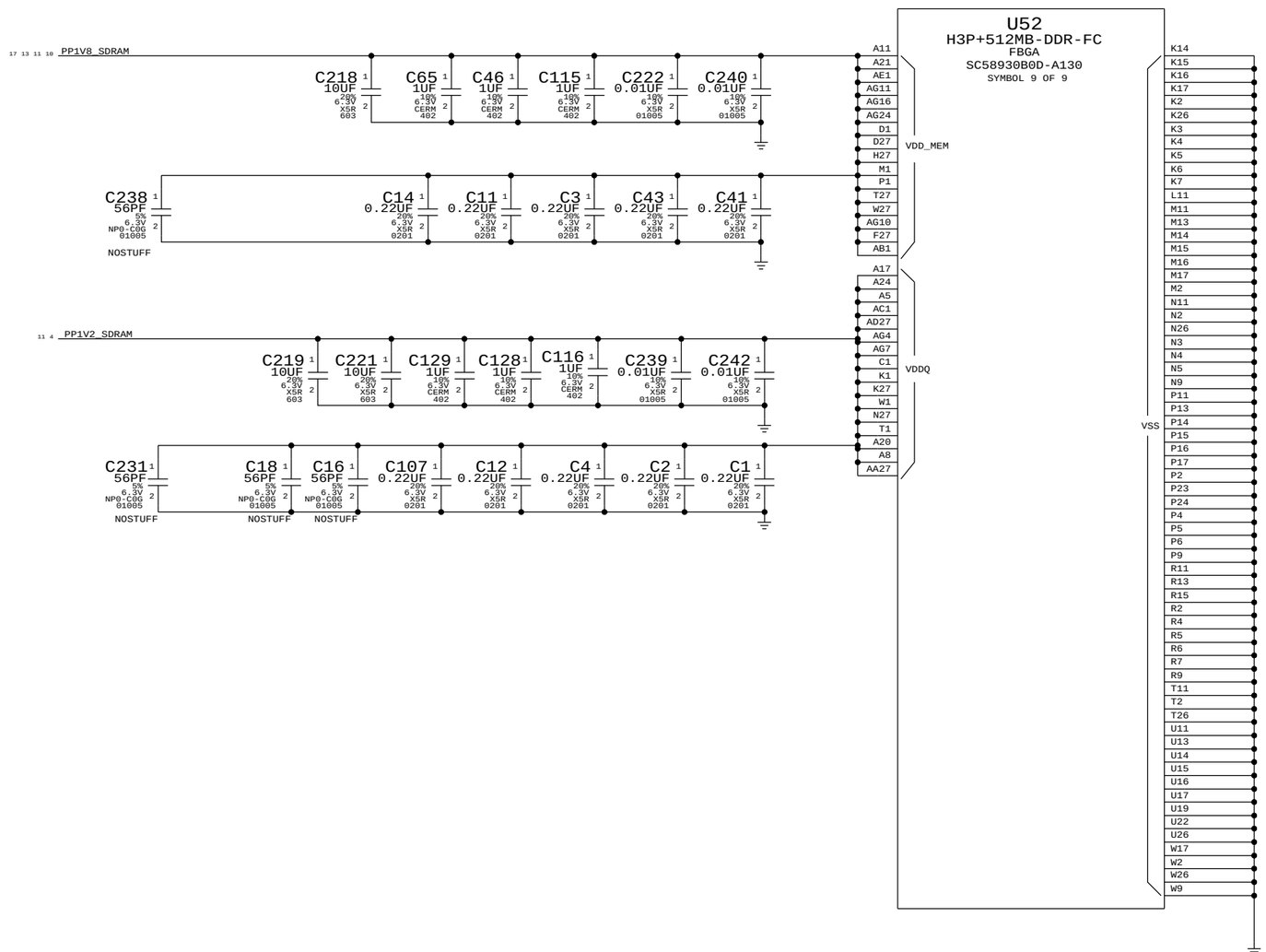

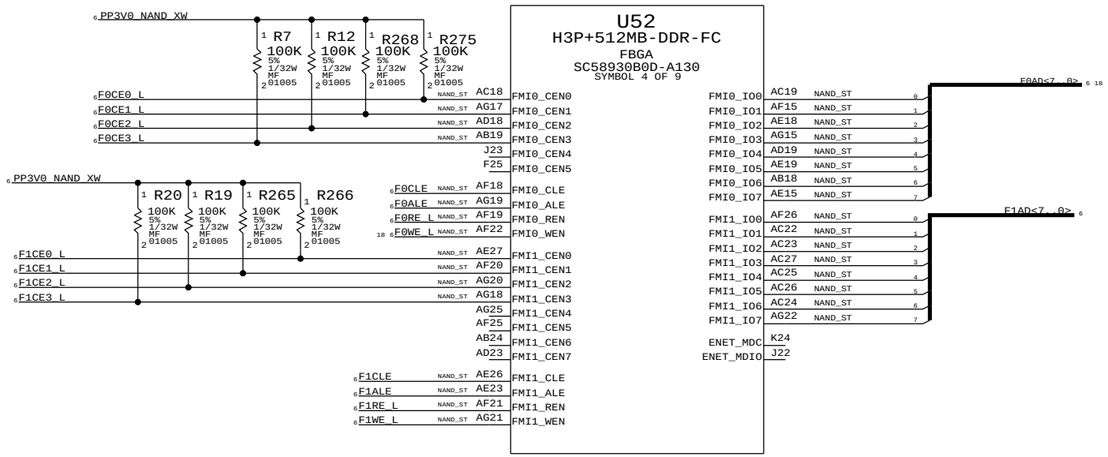

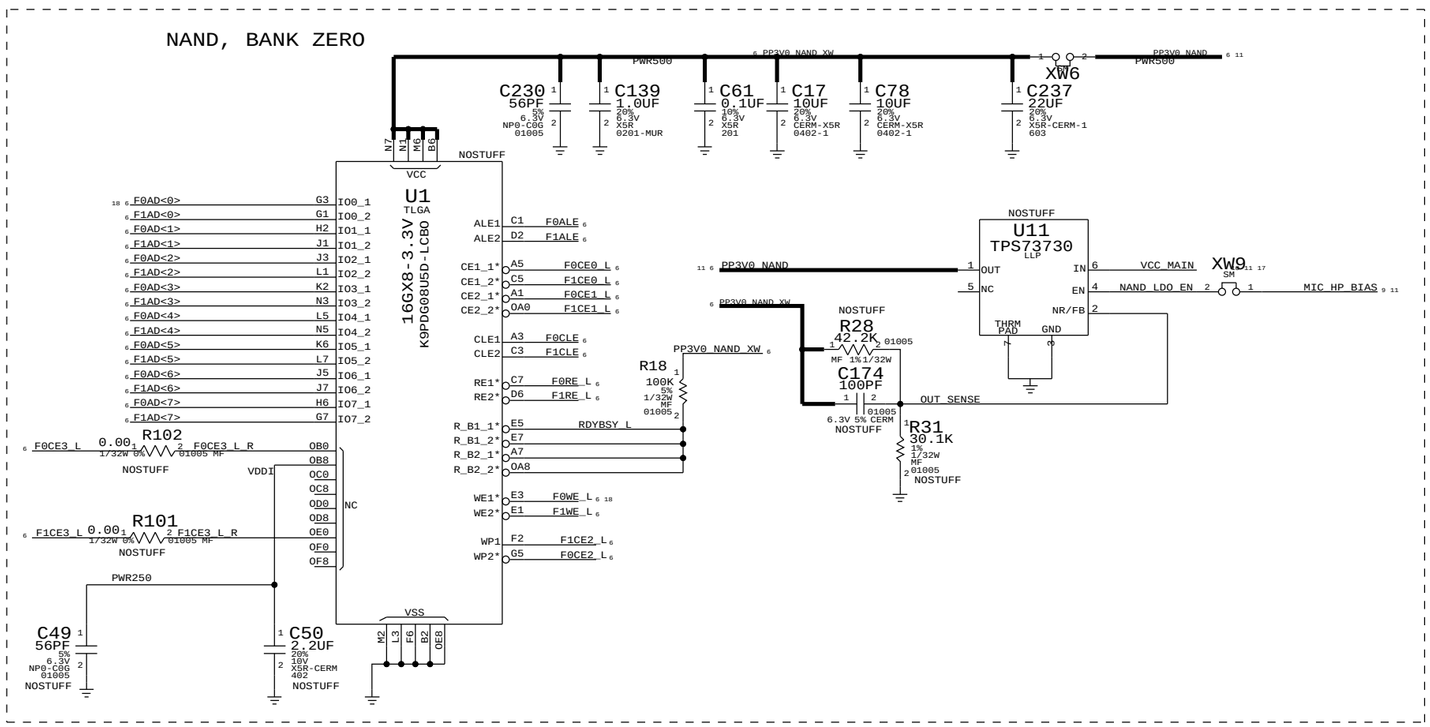

NAND BOM OPTIONS

PART#	QTY	DESCRIPTION	REFERENCE DESIGNATOR(S)	CRITICAL	BOM OPTION
607-7990	1	SUBBOM 16G RAW	SUB1	Y	FLASH_16GB
607-7989	1	SUBBOM 32G RAW	SUB1	Y	FLASH_32GB
607-7998	1	SUBBOM 64G RAW LDO	SUB1	Y	FLASH_64GB

NAND ALTERNATE SUBBOMS

PART NUMBER	ALTERNATE FOR PART NUMBER	BOM OPTION	REF DES	COMMENTS:
607-7995	607-7990	NOSTUFF	SUB1	16G PPN LDO ALT
607-7997	607-7989	NOSTUFF	SUB1	32G PPN LDO ALT
607-7996	607-7998	NOSTUFF	SUB1	64G PPN LDO ALT
607-7992	607-7990		SUB1	16G PPN ALT
607-7993	607-7989		SUB1	32G PPN ALT
607-7994	607-7998	NOSTUFF	SUB1	64G PPN ALT
607-7999	607-7990	NOSTUFF	SUB1	16G RAW LDO ALT
607-8000	607-7989	NOSTUFF	SUB1	32G RAW LDO ALT
607-7991	607-7998	NOSTUFF	SUB1	64G RAW ALT

===NOTES===

-ALL SUB-BOMS THAT ARE NOT USED ARE DESIGNATED WITH BOMOPTION "NOSTUFF"

-TO ADD ADDITIONAL NAND DEVICES OR TO CHANGE A NAND CONFIG USE THE "NAND BOM" SUBDESIGN TO MANAGE THE 607- APNS LISTED ABOVE

-THIS TABLE SHOULD NOT BE MODIFIED OTHER THAN TO ADD/REMOVE THE "NOSTUFF" PROPERTY.

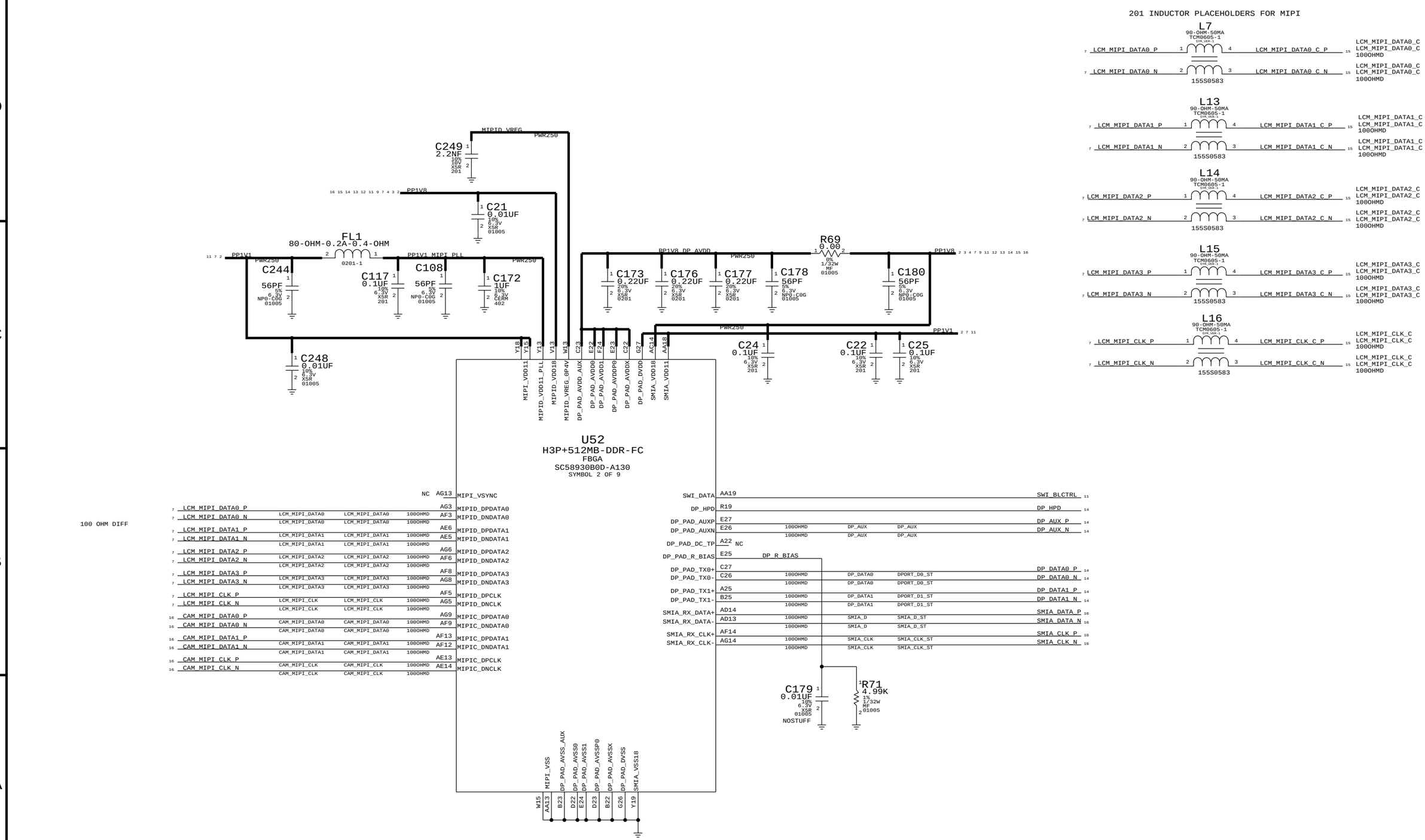
201 INDUCTOR PLACEHOLDERS FOR MIPI
L7
90-OHM-50MA
TCM0605-1
LCM_MIPI_DATA0_P
LCM_MIPI_DATA0_N
LCM_MIPI_DATA0_C_P
LCM_MIPI_DATA0_C_N
155S0583
L13
90-OHM-50MA
TCM0605-1
LCM_MIPI_DATA1_P
LCM_MIPI_DATA1_N
LCM_MIPI_DATA1_C_P
LCM_MIPI_DATA1_C_N
155S0583
L14
90-OHM-50MA
TCM0605-1
LCM_MIPI_DATA2_P
LCM_MIPI_DATA2_N
LCM_MIPI_DATA2_C_P
LCM_MIPI_DATA2_C_N
155S0583
L15
90-OHM-50MA
TCM0605-1
LCM_MIPI_DATA3_P
LCM_MIPI_DATA3_N
LCM_MIPI_DATA3_C_P
LCM_MIPI_DATA3_C_N
155S0583
L16
90-OHM-50MA
TCM0605-1
LCM_MIPI_CLK_P
LCM_MIPI_CLK_N
LCM_MIPI_CLK_C_P
LCM_MIPI_CLK_C_N
155S0583
100OHMD
MIPID_VREG
PWR250
C249
2.2NF
C21
0.01UF
PP1V8
FL1
80-OHM-0.2A-0.4-OHM
0201-1
PP1V1
C244
56PF
C117
0.1UF
C108
56PF
PP1V1_MIPI_PLL
C172
1UF
C248
0.01UF
C173
0.22UF
C176
0.22UF
C177
0.22UF
C178
56PF
PP1V8_DP_AVDD
R69
0.00
C180
56PF
C24
0.1UF
C22
0.1UF
C25
0.1UF
U52
H3P+512MB-DDR-FC
FBGA
SC58930B0D-A130
SYMBOL 2 OF 9
MIPI_VSYNC
MIPID_DPDATA0
MIPID_DNDATA0
MIPID_DPDATA1
MIPID_DNDATA1
MIPID_DPDATA2
MIPID_DNDATA2
MIPID_DPDATA3
MIPID_DNDATA3
MIPID_DPCLK
MIPID_DNCLK
MIPIC_DPDATA0
MIPIC_DNDATA0
MIPIC_DPDATA1
MIPIC_DNDATA1
MIPIC_DPCLK
MIPIC_DNCLK
100 OHM DIFF
SWI_DATA
SWI_BLCTRL
DP_HPD
DP_AUX_P
DP_AUX_N
DP_PAD_DC_TP
DP_PAD_R_BIAS
DP_R_BIAS
DP_DATA0_P
DP_DATA0_N
DP_DATA1_P
DP_DATA1_N
SMIA_RX_DATA+
SMIA_RX_DATA-
SMIA_DATA_P
SMIA_DATA_N
SMIA_RX_CLK+
SMIA_RX_CLK-
SMIA_CLK_P
SMIA_CLK_N
C179
0.01UF
NOSTUFF
R71
4.99K
MIPI_VSS
DP_PAD_AVSS_AUX
DP_PAD_AVSS0
DP_PAD_AVSS1
DP_PAD_AVSSP0
DP_PAD_AVSSX
DP_PAD_DVSS
SMIA_VSS18

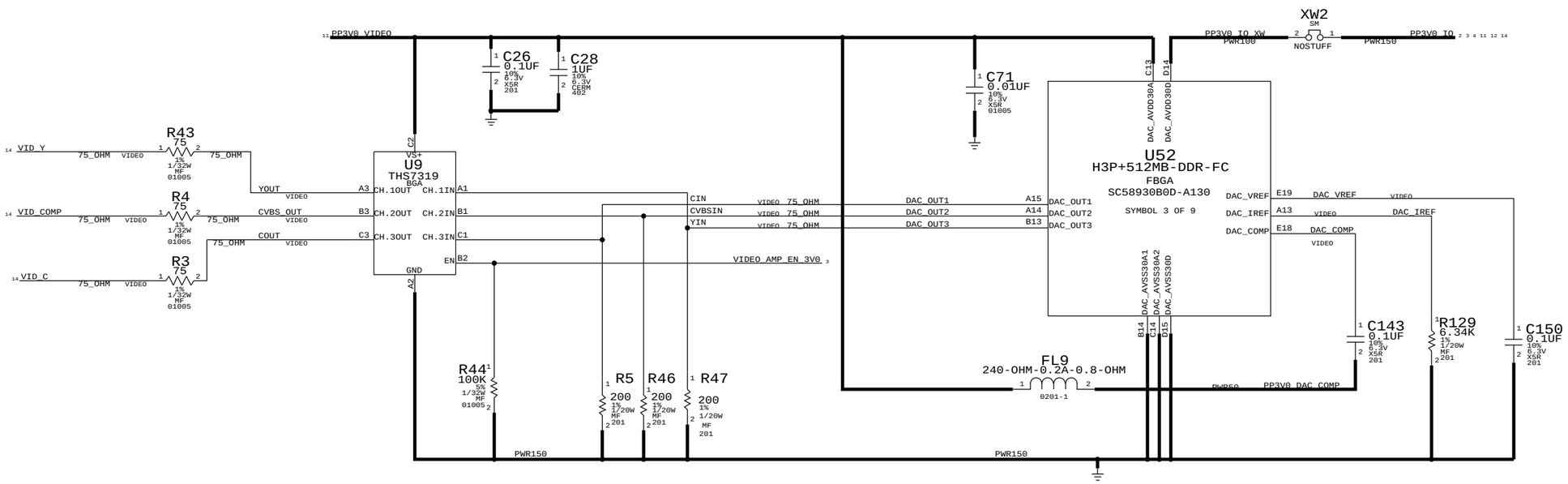
PP3V0 VIDEO
C26
0.1UF
C28
1UF
C71
0.01UF
XW2
SM
NOSTUFF
PP3V0 IO XW
PWR100
PP3V0 IO
PWR150
R43
75
R4
75
R3
75
VID Y
VID COMP
VID C
75_OHM
VIDEO
YOUT
CVBS_OUT
COUT
U9
THS7319
BGA
CH.1OUT
CH.2OUT
CH.3OUT
CH.1IN
CH.2IN
CH.3IN
VS+
GND
EN
CIN
CVBSIN
YIN
VIDEO_AMP_EN_3V0
U52
H3P+512MB-DDR-FC
FBGA
SC58930B0D-A130
SYMBOL 3 OF 9
DAC_OUT1
DAC_OUT2
DAC_OUT3
DAC_VREF
DAC_IREF
DAC_COMP
DAC_AVDD30A
DAC_AVDD30D
DAC_AVSS30A1
DAC_AVSS30A2
DAC_AVSS30D
FL9
240-OHM-0.2A-0.8-OHM
0201-1
PP3V0_DAC_COMP
C143
0.1UF
R129
6.34K
C150
0.1UF
R44
100K
R5
200
R46
200
R47
200
PWR150

L61 AUDIO INTERFACE

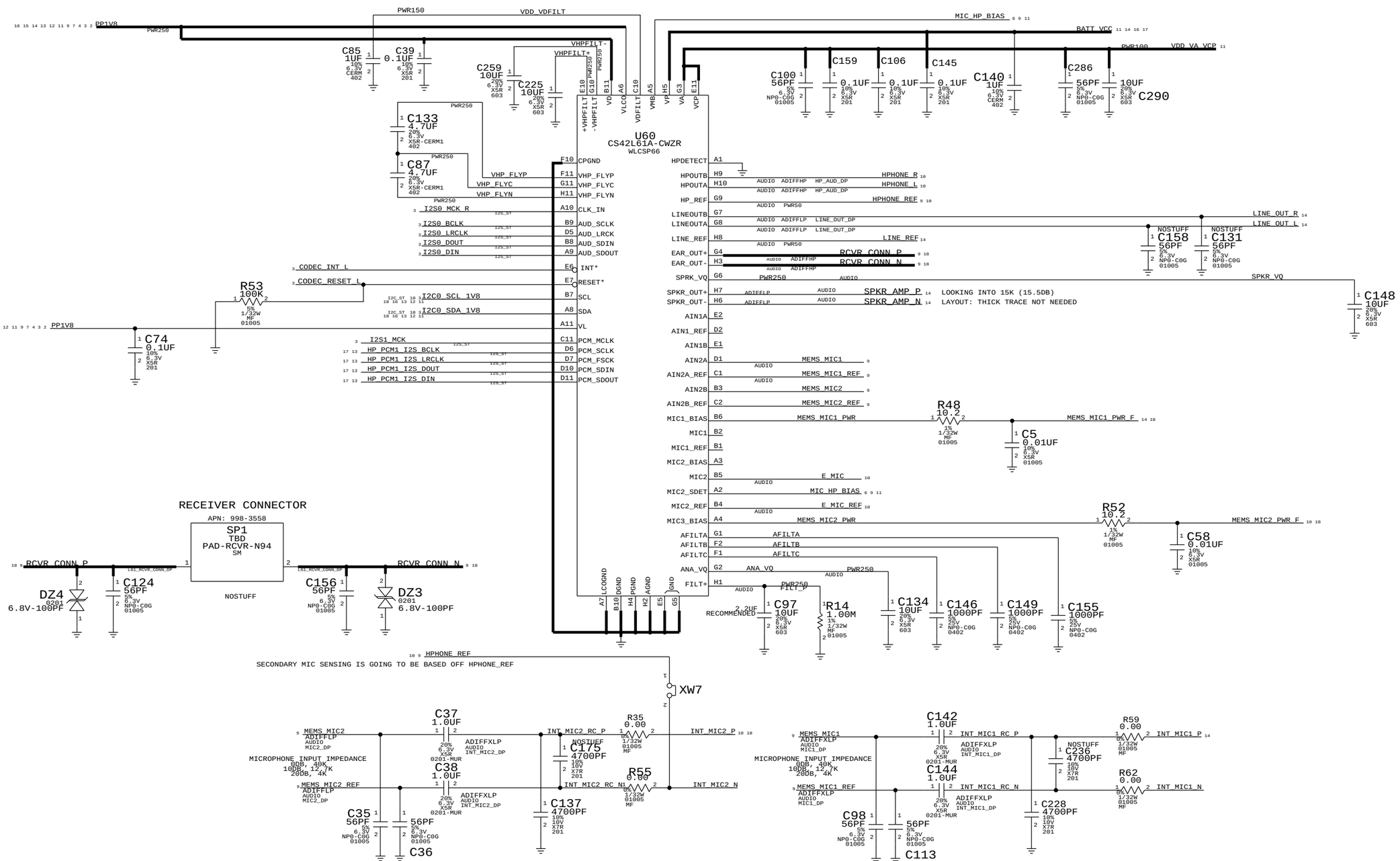

L61 HEADPHONE CONNECTOR

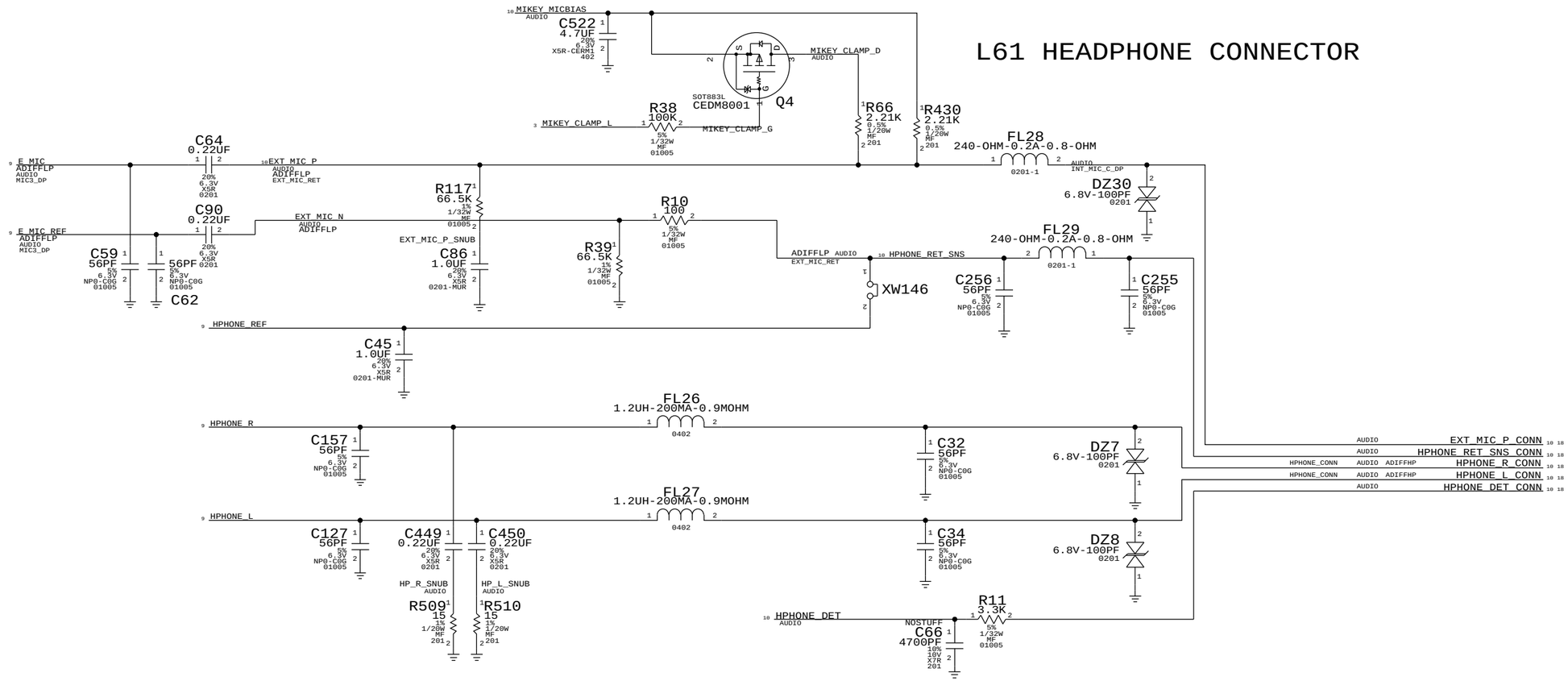

BUTTON FLEX CONNECTOR

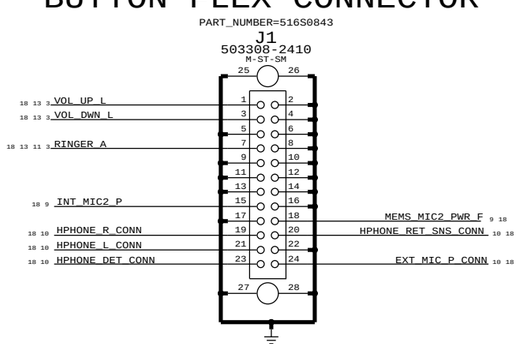

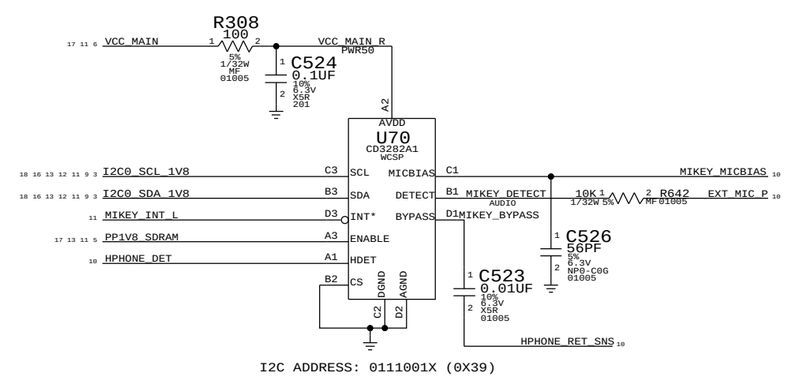

I2C ADDRESS: 0111001X (0X39)

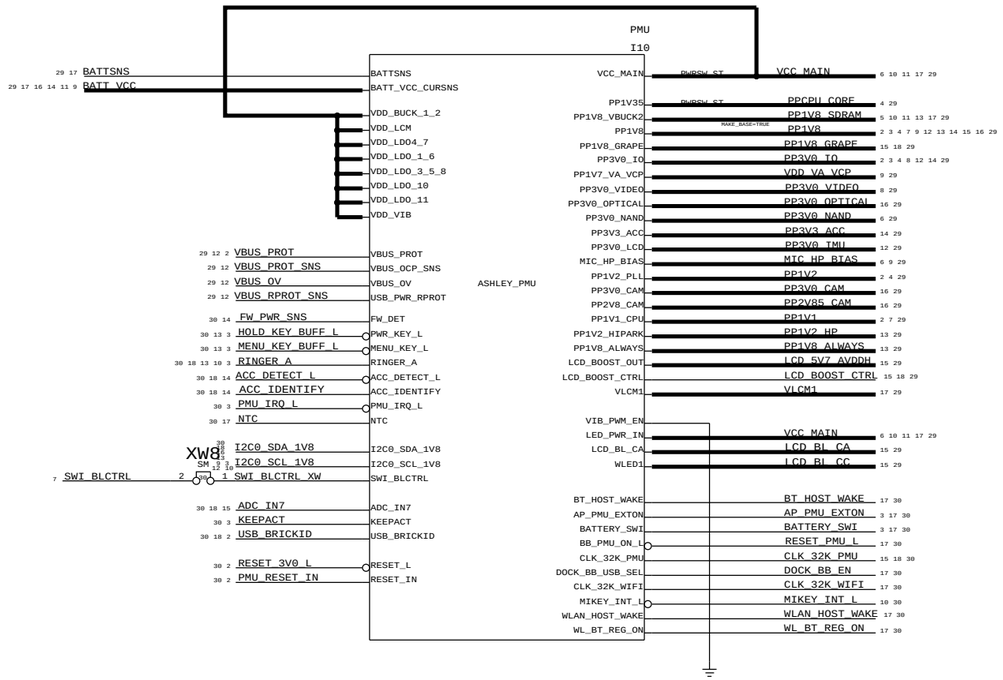

LOCATED ON PP 29 - 30

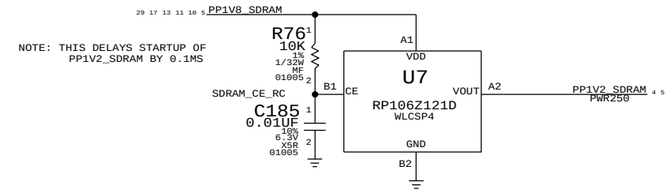

LINEAR VIBE DRIVE

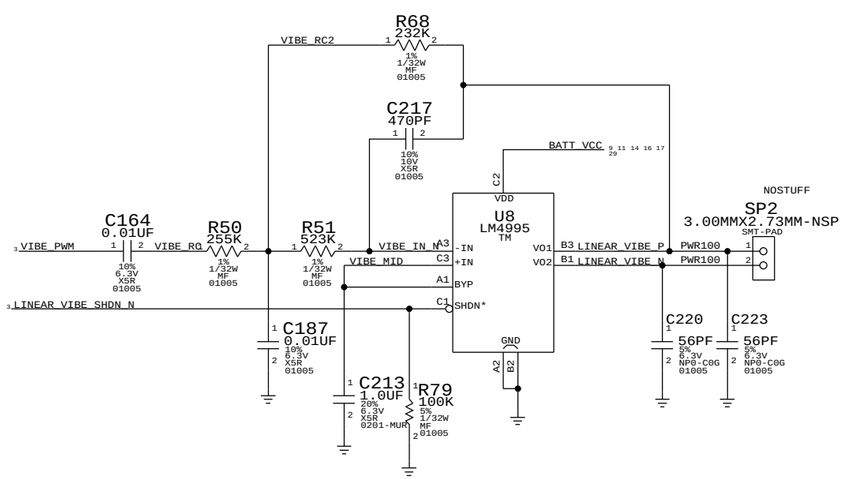

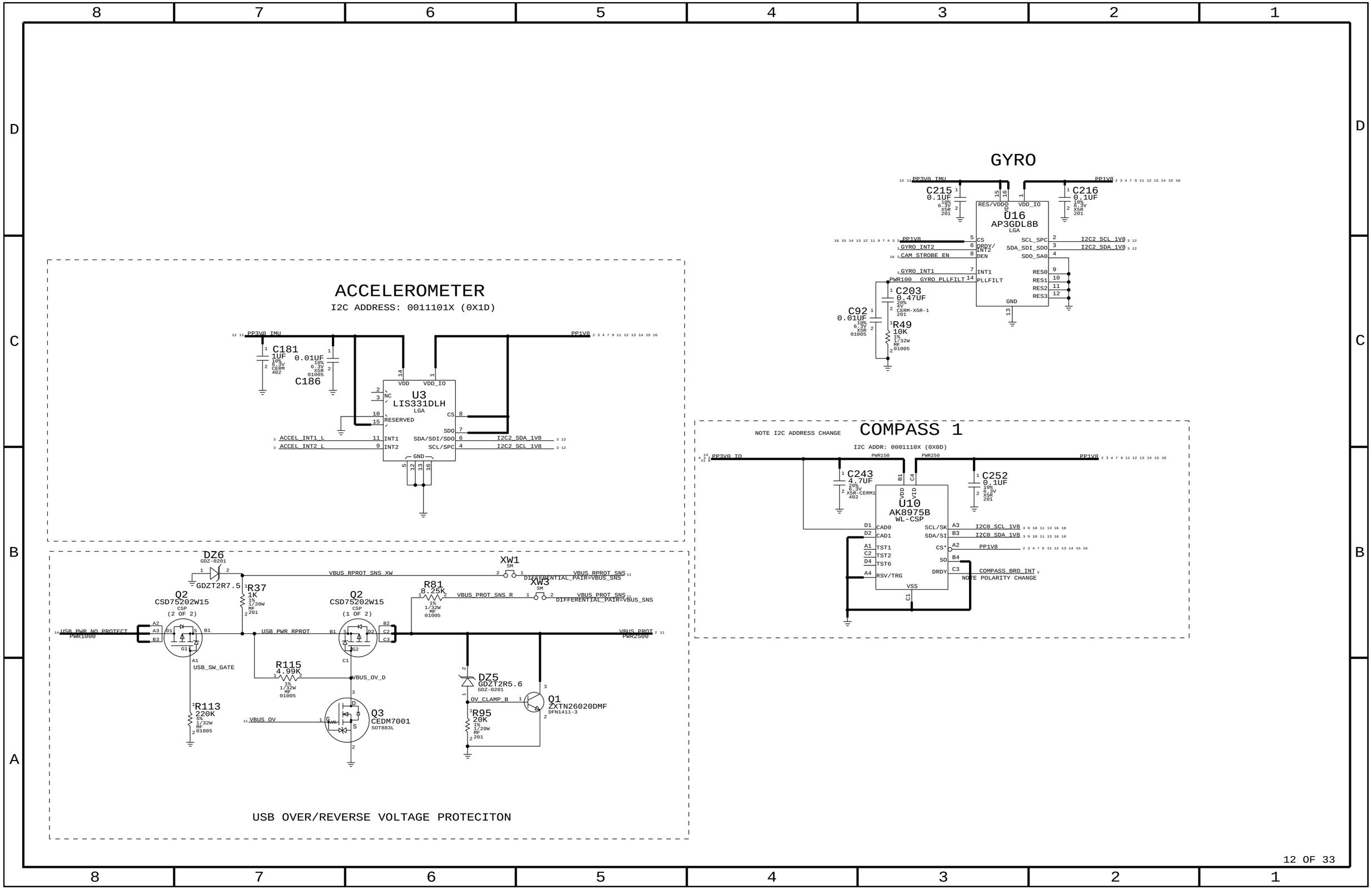
GYRO
U16
AP3GDL8B
LGA
RES/VDDIO
VDD_IO
CS
DRDY/INT2
DEN
INT1
PLLFILT
SCL_SPC
SDA_SDI_SDO
SDO_SA0
RES0
RES1
RES2
RES3
GND
PP3V0_IMU
PP1V8
C215
0.1UF
C216
0.1UF
C203
0.47UF
C92
0.01UF
R49
10K
GYRO_INT2
CAM_STROBE_EN
GYRO_INT1
PWR100
GYRO_PLLFILT
I2C2_SCL_1V8
I2C2_SDA_1V8
ACCELEROMETER
I2C ADDRESS: 0011101X (0X1D)
U3
LIS331DLH
LGA
VDD
VDD_IO
NC
RESERVED
CS
SDO
INT1
INT2
SDA/SDI/SDO
SCL/SPC
GND
C181
1UF
0.01UF
C186
ACCEL_INT1_L
ACCEL_INT2_L
COMPASS 1
NOTE I2C ADDRESS CHANGE
I2C ADDR: 0001110X (0X0D)
U10
AK8975B
WL-CSP
PP3V0_IO
PWR150
PWR250
C243
4.7UF
C252
0.1UF
CAD0
CAD1
TST1
TST2
TST6
RSV/TRG
VDD
VID
SCL/SK
SDA/SI
CS*
SO
DRDY
VSS
I2C0_SCL_1V8
I2C0_SDA_1V8
COMPASS_BRD_INT
NOTE POLARITY CHANGE
USB OVER/REVERSE VOLTAGE PROTECITON
DZ6
GDZ-0201
GDZT2R7.5
R37
1K
XW1
XW3
VBUS_RPROT_SNS_XW
VBUS_RPROT_SNS
DIFFERENTIAL_PAIR=VBUS_SNS
R81
8.25K
VBUS_PROT_SNS_R
VBUS_PROT_SNS
Q2
CSD75202W15
CSP
(2 OF 2)
(1 OF 2)
USB_PWR_NO_PROTECT
PWR1000
USB_PWR_RPROT
USB_SW_GATE
VBUS_PROT
PWR2500
R115
4.99K
VBUS_OV_D
R113
220K
VBUS_OV
Q3
CEDM7001
SOT883L
DZ5
GDZT2R5.6
GDZ-0201
OV_CLAMP_B
R95
20K
Q1
ZXTN26020DMF
DFN1411-3

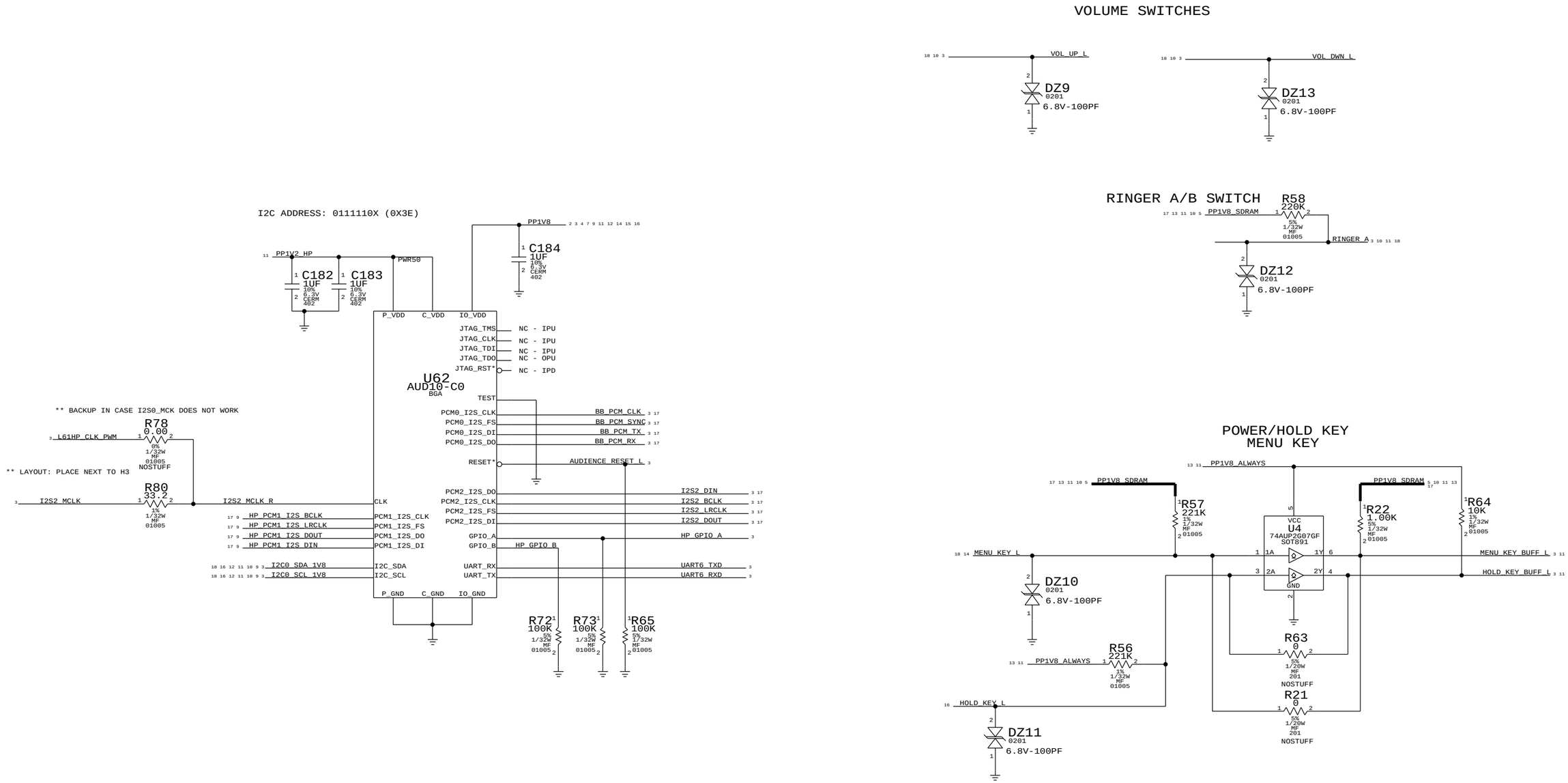
VOLUME SWITCHES
VOL_UP_L
DZ9
0201
6.8V-100PF
VOL_DWN_L
DZ13
0201
6.8V-100PF
RINGER A/B SWITCH
R58
220K
5%
1/32W
MF
01005
PP1V8_SDRAM
RINGER_A
DZ12
0201
6.8V-100PF
I2C ADDRESS: 0111110X (0X3E)
PP1V8
C184
1UF
10%
6.3V
CERM
402
PP1V2_HP
PWR50
C182
1UF
10%
6.3V
CERM
402
C183
1UF
10%
6.3V
CERM
402
P_VDD
C_VDD
IO_VDD
JTAG_TMS
JTAG_CLK
JTAG_TDI
JTAG_TDO
JTAG_RST*
NC - IPU
NC - IPU
NC - IPU
NC - OPU
NC - IPD
U62
AUD10-C0
BGA
TEST
PCM0_I2S_CLK
PCM0_I2S_FS
PCM0_I2S_DI
PCM0_I2S_DO
BB_PCM_CLK
BB_PCM_SYNC
BB_PCM_TX
BB_PCM_RX
RESET*
AUDIENCE_RESET_L
** BACKUP IN CASE I2S0_MCK DOES NOT WORK
R78
0.00
0%
1/32W
MF
01005
NOSTUFF
L61HP_CLK_PWM
** LAYOUT: PLACE NEXT TO H3
R80
33.2
1%
1/32W
MF
01005
I2S2_MCLK
I2S2_MCLK_R
CLK
HP_PCM1_I2S_BCLK
HP_PCM1_I2S_LRCLK
HP_PCM1_I2S_DOUT
HP_PCM1_I2S_DIN
PCM1_I2S_CLK
PCM1_I2S_FS
PCM1_I2S_DO
PCM1_I2S_DI
I2C0_SDA_1V8
I2C0_SCL_1V8
I2C_SDA
I2C_SCL
PCM2_I2S_DO
PCM2_I2S_CLK
PCM2_I2S_FS
PCM2_I2S_DI
I2S2_DIN
I2S2_BCLK
I2S2_LRCLK
I2S2_DOUT
GPIO_A
GPIO_B
HP_GPIO_A
HP_GPIO_B
UART_RX
UART_TX
UART6_TXD
UART6_RXD
P_GND
C_GND
IO_GND
R72
100K
5%
1/32W
MF
01005
R73
100K
5%
1/32W
MF
01005
R65
100K
5%
1/32W
MF
01005
POWER/HOLD KEY
MENU KEY
PP1V8_ALWAYS
PP1V8_SDRAM
R57
221K
1%
1/32W
MF
01005
R22
1.00K
5%
1/32W
MF
01005
R64
10K
1%
1/32W
MF
01005
VCC
U4
74AUP2G07GF
SOT891
GND
1A
2A
1Y
2Y
MENU_KEY_L
MENU_KEY_BUFF_L
HOLD_KEY_BUFF_L
DZ10
0201
6.8V-100PF
R56
221K
1%
1/32W
MF
01005
R63
0
5%
1/20W
MF
201
NOSTUFF
R21
0
5%
1/20W
MF
201
NOSTUFF
HOLD_KEY_L
DZ11
0201
6.8V-100PF

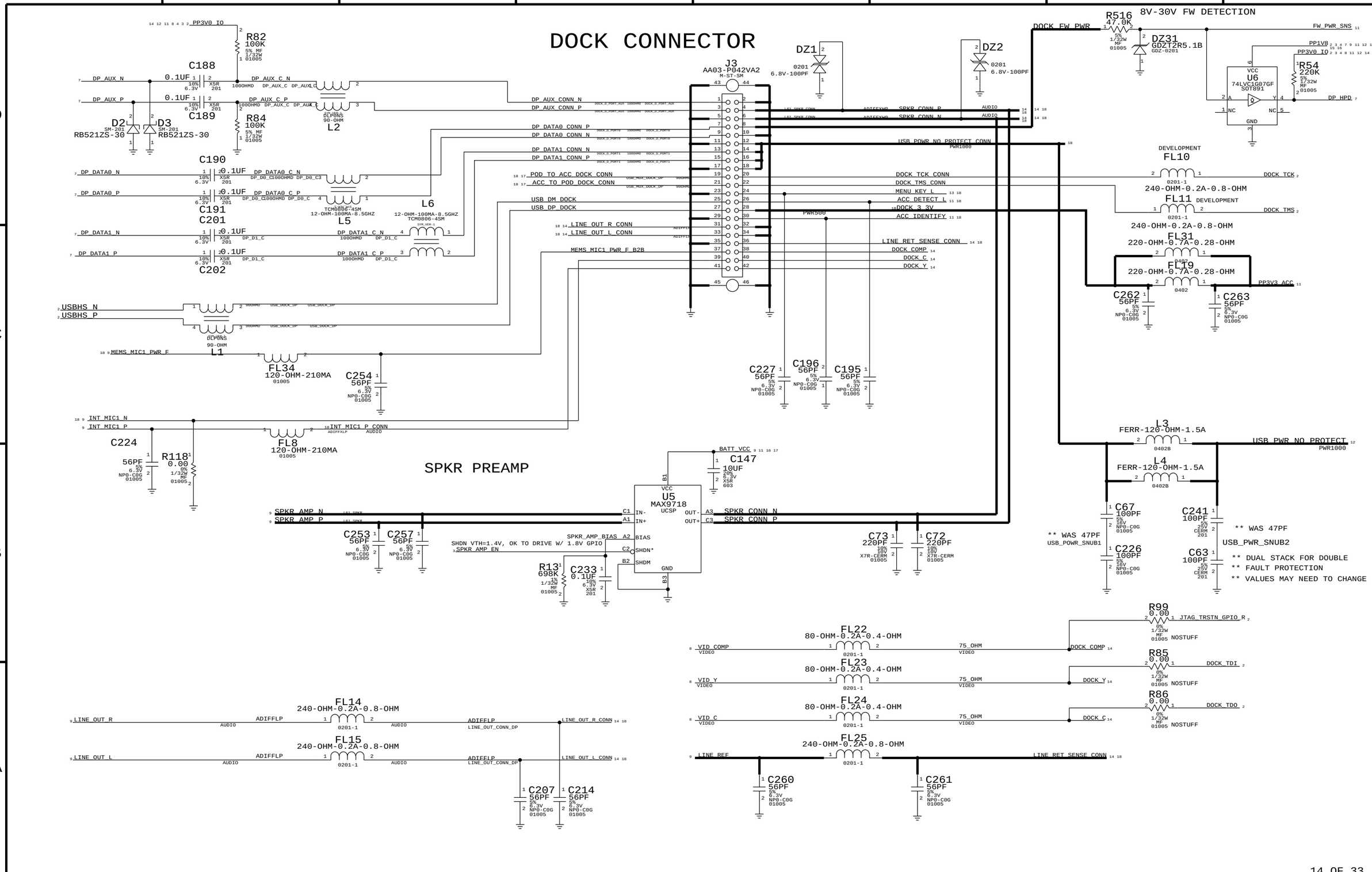
DOCK CONNECTOR
J3
AA03-P042VA2
M-ST-SM
8V-30V FW DETECTION
R516
47.0K
DZ31
GDZT2R5.1B
GDZ-0201
DZ1
6.8V-100PF
DZ2
6.8V-100PF
U6
74LVC1G07GF
SOT891
R54
220K
DEVELOPMENT
FL10
240-OHM-0.2A-0.8-OHM
FL11
240-OHM-0.2A-0.8-OHM
FL31
220-OHM-0.7A-0.28-OHM
FL19
220-OHM-0.7A-0.28-OHM
C262
56PF
C263
56PF
L3
FERR-120-OHM-1.5A
L4
FERR-120-OHM-1.5A
C67
100PF
C241
100PF
C226
100PF
C63
100PF
** WAS 47PF
USB_POWR_SNUB1
** WAS 47PF
USB_PWR_SNUB2
** DUAL STACK FOR DOUBLE
** FAULT PROTECTION
** VALUES MAY NEED TO CHANGE
R82
100K
R84
100K
C188
0.1UF
C189
C190
C191
C201
C202
D2
RB521ZS-30
D3
RB521ZS-30
L2
L5
L6
L1
FL34
120-OHM-210MA
C254
56PF
C224
56PF
R118
0.00
FL8
120-OHM-210MA
SPKR PREAMP
U5
MAX9718
UCSP
C147
10UF
C253
56PF
C257
56PF
R13
698K
C233
0.1UF
C73
220PF
C72
220PF
SHDN VTH=1.4V, OK TO DRIVE W/ 1.8V GPIO
R99
0.00
NOSTUFF
R85
0.00
NOSTUFF
R86
0.00
NOSTUFF
FL22
80-OHM-0.2A-0.4-OHM
FL23
80-OHM-0.2A-0.4-OHM
FL24
80-OHM-0.2A-0.4-OHM
FL25
240-OHM-0.2A-0.8-OHM
FL14
240-OHM-0.2A-0.8-OHM
FL15
240-OHM-0.2A-0.8-OHM
C227
56PF
C196
56PF
C195
56PF
C260
56PF
C261
56PF
C207
56PF
C214
56PF

NIMBUS

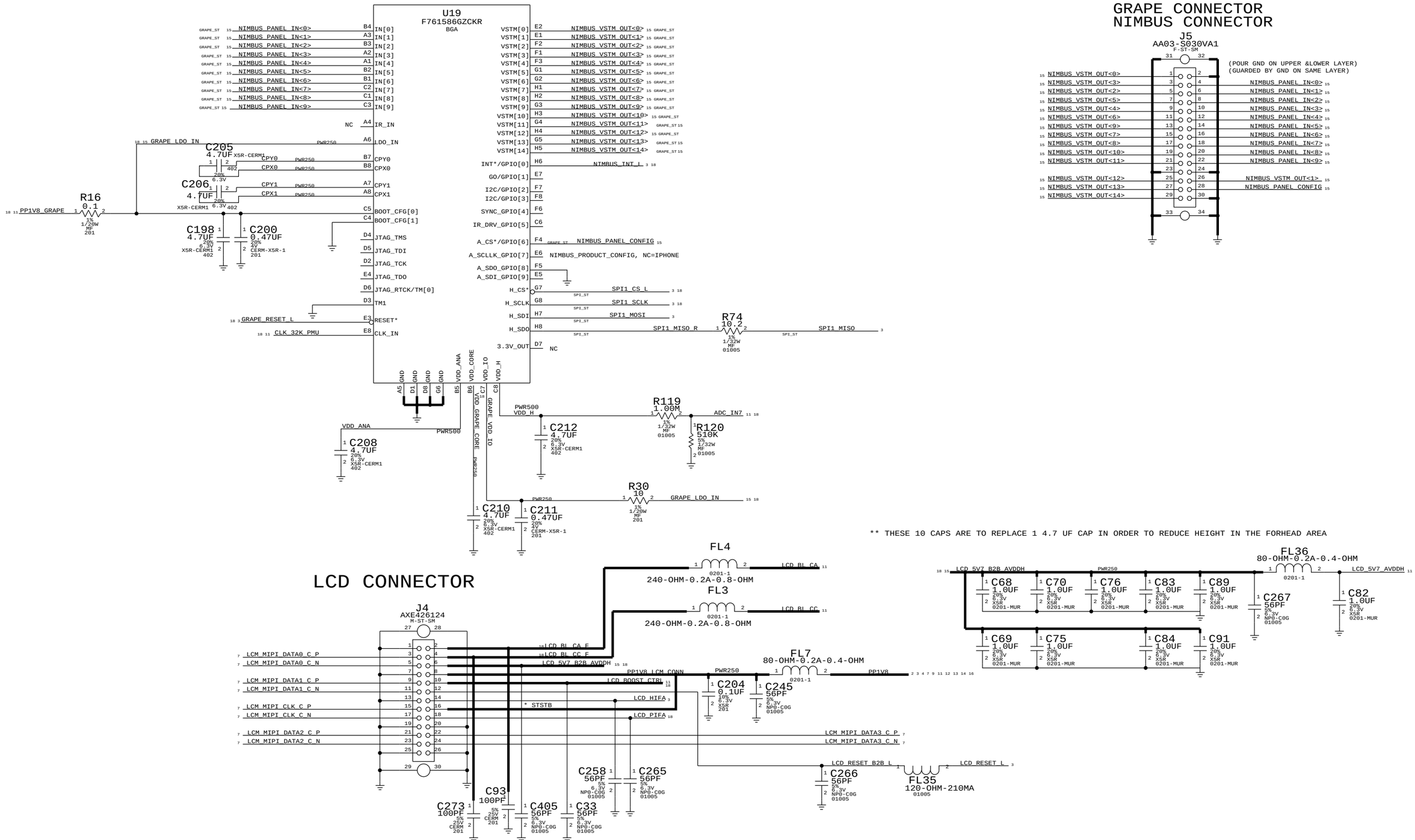
U19
F761586GZCKR
BGA
NIMBUS_PANEL_IN<0>
NIMBUS_PANEL_IN<1>
NIMBUS_PANEL_IN<2>
NIMBUS_PANEL_IN<3>
NIMBUS_PANEL_IN<4>
NIMBUS_PANEL_IN<5>
NIMBUS_PANEL_IN<6>
NIMBUS_PANEL_IN<7>
NIMBUS_PANEL_IN<8>
NIMBUS_PANEL_IN<9>
IN[0]
IN[1]
IN[2]
IN[3]
IN[4]
IN[5]
IN[6]
IN[7]
IN[8]
IN[9]
NC
IR_IN
GRAPE_LDO_IN
LDO_IN
C205
4.7UF
X5R-CERM1
CPY0
CPX0
C206
4.7UF
CPY1
CPX1
R16
0.1
PP1V8_GRAPE
C198
4.7UF
C200
0.47UF
BOOT_CFG[0]
BOOT_CFG[1]
JTAG_TMS
JTAG_TDI
JTAG_TCK
JTAG_TDO
JTAG_RTCK/TM[0]
TM1
GRAPE_RESET_L
RESET*
CLK_32K_PMU
CLK_IN
VSTM[0]
VSTM[1]
VSTM[2]
VSTM[3]
VSTM[4]
VSTM[5]
VSTM[6]
VSTM[7]
VSTM[8]
VSTM[9]
VSTM[10]
VSTM[11]
VSTM[12]
VSTM[13]
VSTM[14]
NIMBUS_VSTM_OUT<0>
NIMBUS_VSTM_OUT<1>
NIMBUS_VSTM_OUT<2>
NIMBUS_VSTM_OUT<3>
NIMBUS_VSTM_OUT<4>
NIMBUS_VSTM_OUT<5>
NIMBUS_VSTM_OUT<6>
NIMBUS_VSTM_OUT<7>
NIMBUS_VSTM_OUT<8>
NIMBUS_VSTM_OUT<9>
NIMBUS_VSTM_OUT<10>
NIMBUS_VSTM_OUT<11>
NIMBUS_VSTM_OUT<12>
NIMBUS_VSTM_OUT<13>
NIMBUS_VSTM_OUT<14>
INT*/GPIO[0]
NIMBUS_INT_L
GO/GPIO[1]
I2C/GPIO[2]
I2C/GPIO[3]
SYNC_GPIO[4]
IR_DRV_GPIO[5]
A_CS*/GPIO[6]
NIMBUS_PANEL_CONFIG
A_SCLLK_GPIO[7]
NIMBUS_PRODUCT_CONFIG, NC=IPHONE
A_SDO_GPIO[8]
A_SDI_GPIO[9]
H_CS*
SPI1_CS_L
H_SCLK
SPI1_SCLK
H_SDI
SPI1_MOSI
H_SDO
SPI1_MISO_R
R74
10.2
SPI1_MISO
3.3V_OUT
NC
GND
VDD_ANA
VDD_CORE
VDD_IO
VDD_H
VDD_GRAPE_CORE
GRAPE_VDD_IO
PWR500
VDD_H
C212
4.7UF
R119
1.00M
ADC_IN7
R120
510K
C208
4.7UF
R30
10
GRAPE_LDO_IN
C210
4.7UF
C211
0.47UF
GRAPE CONNECTOR
NIMBUS CONNECTOR
J5
AA03-S030VA1
F-ST-SM
(POUR GND ON UPPER &LOWER LAYER)
(GUARDED BY GND ON SAME LAYER)
NIMBUS_VSTM_OUT<0>
NIMBUS_VSTM_OUT<3>
NIMBUS_VSTM_OUT<2>
NIMBUS_VSTM_OUT<5>
NIMBUS_VSTM_OUT<4>
NIMBUS_VSTM_OUT<6>
NIMBUS_VSTM_OUT<9>
NIMBUS_VSTM_OUT<7>
NIMBUS_VSTM_OUT<8>
NIMBUS_VSTM_OUT<10>
NIMBUS_VSTM_OUT<11>
NIMBUS_VSTM_OUT<12>
NIMBUS_VSTM_OUT<13>
NIMBUS_VSTM_OUT<14>
NIMBUS_PANEL_IN<0>
NIMBUS_PANEL_IN<1>
NIMBUS_PANEL_IN<2>
NIMBUS_PANEL_IN<3>
NIMBUS_PANEL_IN<4>
NIMBUS_PANEL_IN<5>
NIMBUS_PANEL_IN<6>
NIMBUS_PANEL_IN<7>
NIMBUS_PANEL_IN<8>
NIMBUS_PANEL_IN<9>
NIMBUS_VSTM_OUT<1>
NIMBUS_PANEL_CONFIG
** THESE 10 CAPS ARE TO REPLACE 1 4.7 UF CAP IN ORDER TO REDUCE HEIGHT IN THE FORHEAD AREA
FL4
240-OHM-0.2A-0.8-OHM
LCD_BL_CA
FL3
240-OHM-0.2A-0.8-OHM
LCD_BL_CC
FL36
80-OHM-0.2A-0.4-OHM
LCD_5V7_B2B_AVDDH
LCD_5V7_AVDDH
C68
C70
C76
C83
C89
C267
56PF
C82
1.0UF
C69
C75
C84
C91
LCD CONNECTOR
J4
AXE426124
M-ST-SM
LCM_MIPI_DATA0_C_P
LCM_MIPI_DATA0_C_N
LCM_MIPI_DATA1_C_P
LCM_MIPI_DATA1_C_N
LCM_MIPI_CLK_C_P
LCM_MIPI_CLK_C_N
LCM_MIPI_DATA2_C_P
LCM_MIPI_DATA2_C_N
LCD_BL_CA_F
LCD_BL_CC_F
LCD_5V7_B2B_AVDDH
PP1V8_LCM_CONN
LCD_BOOST_CTRL
LCD_HIFA
* STSTB
LCD_PIFA
FL7
80-OHM-0.2A-0.4-OHM
PP1V8
C204
0.1UF
C245
56PF
LCM_MIPI_DATA3_C_P
LCM_MIPI_DATA3_C_N
LCD_RESET_B2B_L
LCD_RESET_L
C266
56PF
FL35
120-OHM-210MA
C258
56PF
C265
56PF
C93
100PF
C273
100PF
C405
56PF
C33
56PF

5MP CAMERA CONNECTOR

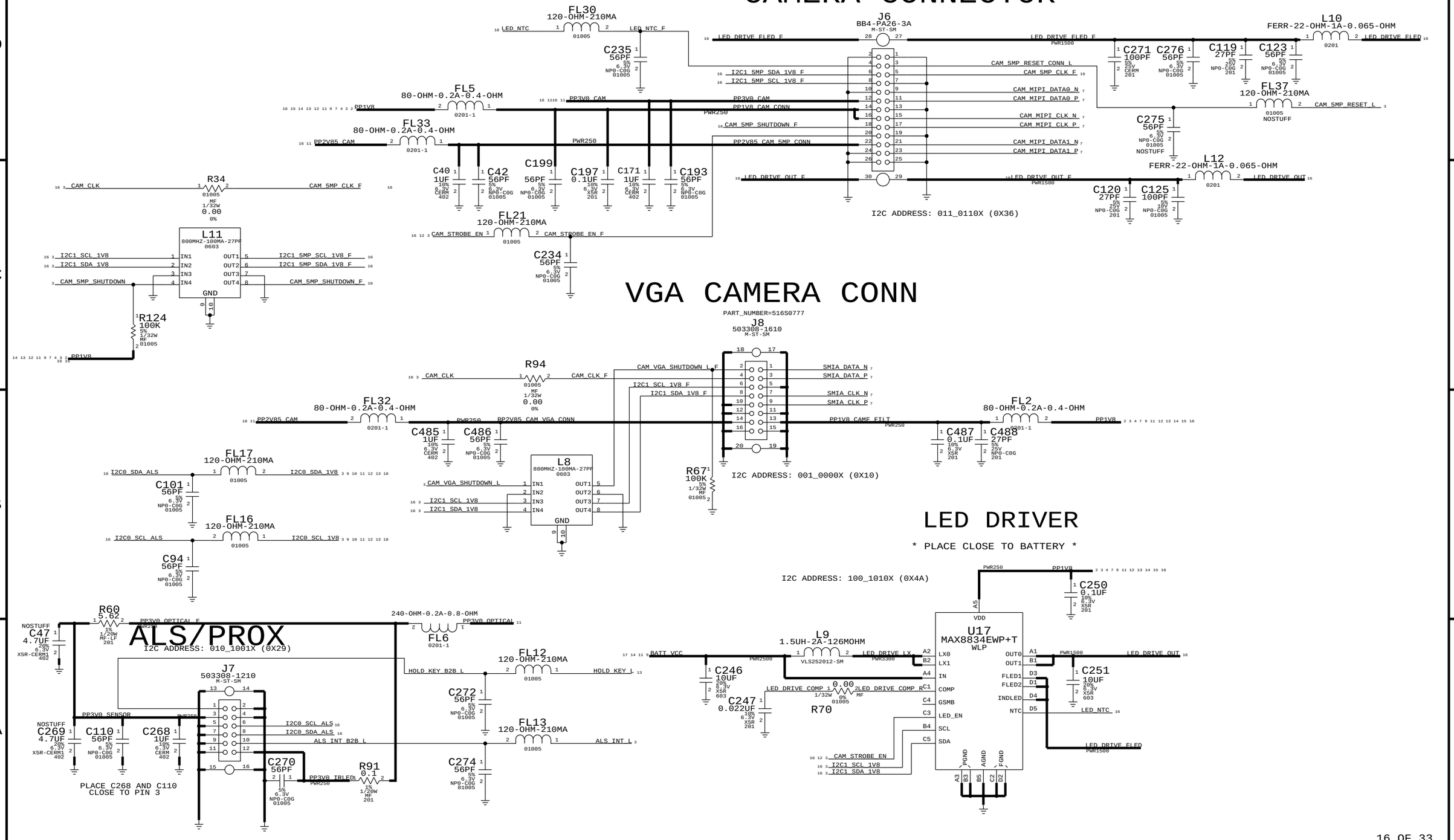

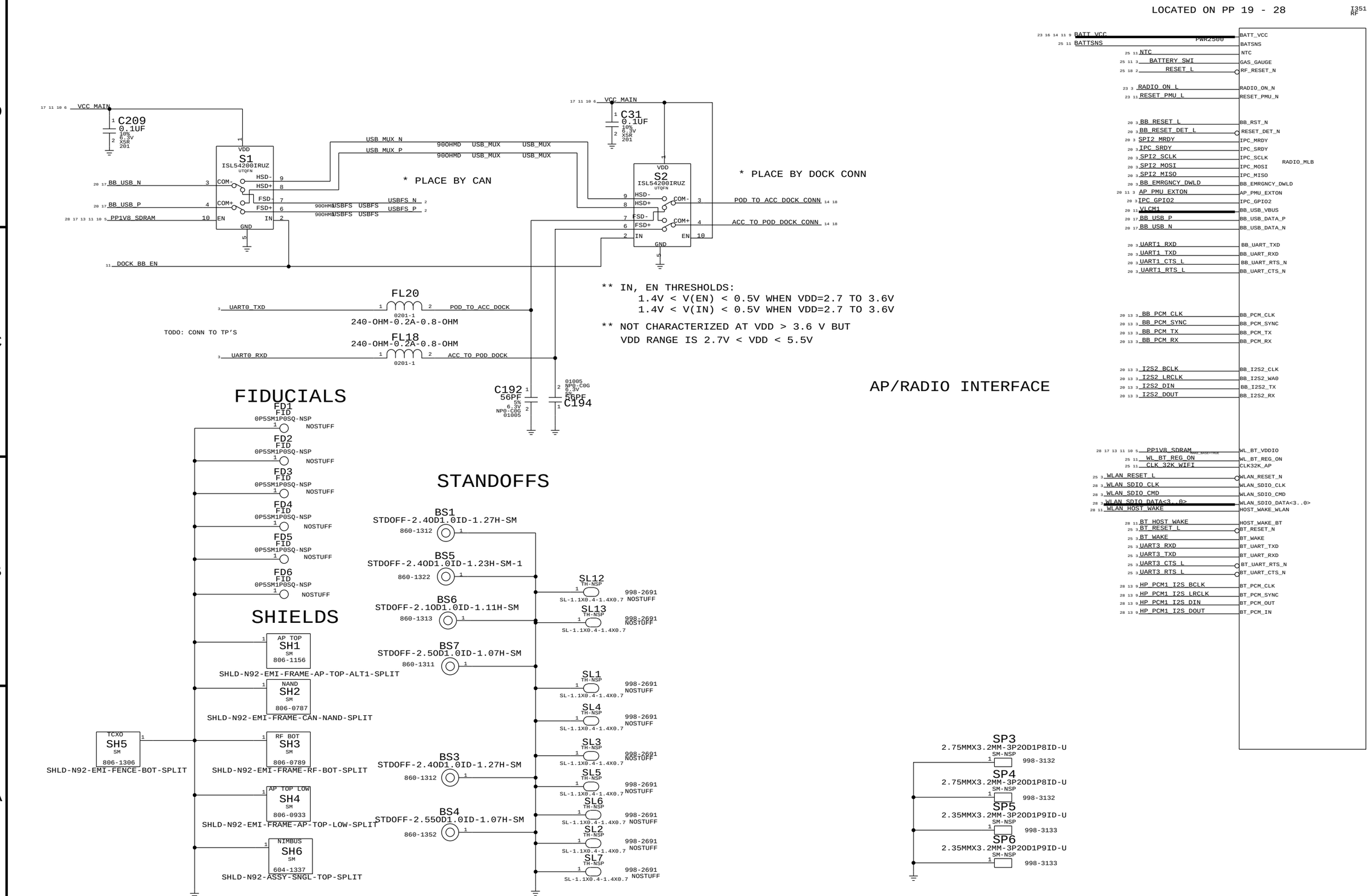
LOCATED ON PP 19 - 28
I351
RF
VCC_MAIN
C209
0.1UF
10%
6.3V
X5R
201
S1
ISL54200IRUZ
UTQFN
VDD
HSD-
HSD+
FSD-
FSD+
COM-
COM+
EN
IN
GND
BB_USB_N
BB_USB_P
PP1V8_SDRAM
DOCK_BB_EN
USB_MUX_N
USB_MUX_P
90OHMD
USB_MUX
USBFS
USBFS_N
USBFS_P
* PLACE BY CAN
C31
0.1UF
S2
ISL54200IRUZ
* PLACE BY DOCK CONN
POD_TO_ACC_DOCK_CONN
ACC_TO_POD_DOCK_CONN
** IN, EN THRESHOLDS:
1.4V < V(EN) < 0.5V WHEN VDD=2.7 TO 3.6V
1.4V < V(IN) < 0.5V WHEN VDD=2.7 TO 3.6V
** NOT CHARACTERIZED AT VDD > 3.6 V BUT
VDD RANGE IS 2.7V < VDD < 5.5V
FL20
UART0_TXD
POD_TO_ACC_DOCK
0201-1
240-OHM-0.2A-0.8-OHM
TODO: CONN TO TP'S
FL18
240-OHM-0.2A-0.8-OHM
UART0_RXD
ACC_TO_POD_DOCK
C192
56PF
5%
6.3V
NP0-C0G
01005
C194
56PF
AP/RADIO INTERFACE
BATT_VCC
BATTSNS
PWR2500
NTC
BATTERY_SWI
RESET_L
RADIO_ON_L
RESET_PMU_L
BB_RESET_L
BB_RESET_DET_L
SPI2_MRDY
IPC_SRDY
SPI2_SCLK
SPI2_MOSI
SPI2_MISO
BB_EMRGNCY_DWLD
AP_PMU_EXTON
IPC_GPIO2
VLCM1
BB_USB_P
BB_USB_N
UART1_RXD
UART1_TXD
UART1_CTS_L
UART1_RTS_L
BB_PCM_CLK
BB_PCM_SYNC
BB_PCM_TX
BB_PCM_RX
I2S2_BCLK
I2S2_LRCLK
I2S2_DIN
I2S2_DOUT
RADIO_MLB
PP1V8_SDRAM
WL_BT_REG_ON
CLK_32K_WIFI
WLAN_RESET_L
WLAN_SDIO_CLK
WLAN_SDIO_CMD
WLAN_SDIO_DATA<3..0>
WLAN_HOST_WAKE
BT_HOST_WAKE
BT_RESET_L
BT_WAKE
UART3_RXD
UART3_TXD
UART3_CTS_L
UART3_RTS_L
HP_PCM1_I2S_BCLK
HP_PCM1_I2S_LRCLK
HP_PCM1_I2S_DIN
HP_PCM1_I2S_DOUT
FIDUCIALS
FD1
FD2
FD3
FD4
FD5
FD6
FID
0P5SM1P0SQ-NSP
NOSTUFF
STANDOFFS
BS1
STDOFF-2.40D1.0ID-1.27H-SM
860-1312
BS5
STDOFF-2.40D1.0ID-1.23H-SM-1
860-1322
BS6
STDOFF-2.10D1.0ID-1.11H-SM
860-1313
BS7
STDOFF-2.50D1.0ID-1.07H-SM
860-1311
BS3
STDOFF-2.40D1.0ID-1.27H-SM
860-1312
BS4
STDOFF-2.55OD1.0ID-1.07H-SM
860-1352
SL12
SL13
SL1
SL4
SL3
SL5
SL6
SL2
SL7
TH-NSP
998-2691
SHIELDS
SH1
AP TOP
806-1156
SHLD-N92-EMI-FRAME-AP-TOP-ALT1-SPLIT
SH2
NAND
806-0787
SHLD-N92-EMI-FRAME-CAN-NAND-SPLIT
SH5
TCXO
806-1306
SHLD-N92-EMI-FENCE-BOT-SPLIT
SH3
RF BOT
806-0789
SHLD-N92-EMI-FRAME-RF-BOT-SPLIT
SH4
AP TOP LOW
806-0933
SHLD-N92-EMI-FRAME-AP-TOP-LOW-SPLIT
SH6
NIMBUS
604-1337
SHLD-N92-ASSY-SNGL-TOP-SPLIT
SP3
2.75MMX3.2MM-3P2OD1P8ID-U
SM-NSP
998-3132
SP4
SP5
2.35MMX3.2MM-3P2OD1P9ID-U
998-3133
SP6

TEST POINTS

GPIO

TODO: CONN TO TP'S

FORCE_DFU	TP421	TP-P6	NOSTUFF
HOLD_KEY_B2B_L	TP412	TP-P6	NOSTUFF
MENU_KEY_L	TP423	TP-P6	NOSTUFF
RINGER_A	TP424	TP-P6	NOSTUFF
VOL_UP_L	TP415	TP-P6	NOSTUFF
VOL_DWN_L	TP425	TP-P6	NOSTUFF

TEST

TST_CLKOUT	TP8	TP-P6	NOSTUFF

RESET

RESET_L	TP6	TP-P6	NOSTUFF

ACCESSORY DETECT

ACC_DETECT_L	TP474	TP-P6	NOSTUFF
ACC_IDENTIFY	TP475	TP-P6	NOSTUFF

UART

POD_TO_ACC_DOCK_CONN	TP449	TP-P6	NOSTUFF
ACC_TO_POD_DOCK_CONN	TP450	TP-P6	NOSTUFF

USB

USB_DP_DOCK	TP451	TP-P6	NOSTUFF
USB_DM_DOCK	TP452	TP-P6	NOSTUFF

POWER

ADC_IN7	TP457	TP-P6	NOSTUFF
DOCK_3_3V	TP4	TP-P6	NOSTUFF
USB_POWR_NO_PROTECT_CONN	TP455	TP-P6	NOSTUFF
USB_POWR_NO_PROTECT_CONN	TP11	TP-P6	NOSTUFF
USB_BRICKID	TP5	TP-P6	NOSTUFF

SIGNAL GND(SENSE)

	TP443	TP-P6	NOSTUFF

HEADPHONE

EXT_MIC_P_CONN	TP438	TP-P6	NOSTUFF
HPHONE_RET_SNS_CONN	TP12	TP-P6	NOSTUFF
HPHONE_R_CONN	TP440	TP-P6	NOSTUFF
HPHONE_L_CONN	TP441	TP-P6	NOSTUFF
HPHONE_DET_CONN	TP442	TP-P6	NOSTUFF

AUDIO

SPEAKER

SPKR_CONN_P	TP429	TP-P6	NOSTUFF
SPKR_CONN_N	TP430	TP-P6	NOSTUFF

RECEIVER

RCVR_CONN_P	TP413	TP-P6	NOSTUFF
RCVR_CONN_N	TP431	TP-P6	NOSTUFF

MIC

INT_MIC1_P_CONN	TP432	TP-P6	NOSTUFF
INT_MIC1_N	TP433	TP-P6	NOSTUFF
INT_MIC2_P	TP10	TP-P6	NOSTUFF
MEMS_MIC1_PWR_F	TP14	TP-P6	NOSTUFF
MEMS_MIC2_PWR_F	TP15	TP-P6	NOSTUFF

LINE OUT

LINE_OUT_L_CONN	TP1	TP-P6	NOSTUFF
LINE_OUT_R_CONN	TP2	TP-P6	NOSTUFF
LINE_RET_SENSE_CONN (PWR50, AUDIO)	TP3	TP-P6	NOSTUFF

POWER GND

	TP444	TP-1P0-TOP	NOSTUFF
	TP447	TP-1P0-TOP	NOSTUFF
	TP7	TP-1P0-TOP	NOSTUFF
	TP9	TP-1P0-TOP	NOSTUFF

GRAPE

NIMBUS_INT_L	PP8	P4MM SM
SPI1_SCLK (SPI_ST)	PP9	P4MM SM
CLK_32K_PMU	TP477	TP-P6 NOSTUFF

PROBE POINTS

GRAPE

SPI1_CS_L	PP10	P4MM SM
GRAPE_VDD_IO	PP18	P4MM SM
GRAPE_LDO_IN	PP16	P4MM SM
PP1V8_GRAPE	PP17	P4MM SM
GRAPE_RESET_L	PP3	P4MM SM

I2C0_SDA_1V8	PP1	P4MM SM
I2C0_SCL_1V8	PP2	P4MM SM

NAND

F0AD<0>	PP6	P4MM SM
F0WE_L	PP7	P4MM SM

LCM

LCD_BL_CC_F	TP465	TP-P6	NOSTUFF
LCD_BL_CA_F	TP466	TP-P6	NOSTUFF
LCD_5V7_B2B_AVDDH	TP468	TP-P6	NOSTUFF
LCD_BOOST_CTRL	TP469	TP-P6	NOSTUFF
LCD_PIFA	TP13	TP-P6	

1. ALL RESISTANCE VALUES ARE IN OHMS, 0.1 WATT +/- 5%.
2. ALL CAPACITANCE VALUES ARE IN MICROFARADS.
3. ALL CRYSTALS & OSCILLATOR VALUES ARE IN HERTZ.

REV	ECN	DESCRIPTION OF REVISION	CK APPD / DATE
			2010-12-22

N92 RADIO_MLB (PHOENIX)
RADIO_MLB - 12/17/10:SUBDESIGN

PAGE	CONTENTS
02	BASEBAND
03	BASEBAND MEMORY
04	BASEBAND POWER
05	POWER1: CONTROL
06	POWER2: DIGITAL, ANALOG, RF
07	AP INTERFACE AND DEBUG CONNECTOR
08	RX DIVERSITY & GPS LNA
09	RX & TX RF CHAIN
10	WIFI/BLUETOOTH RADIO

BASEBAND

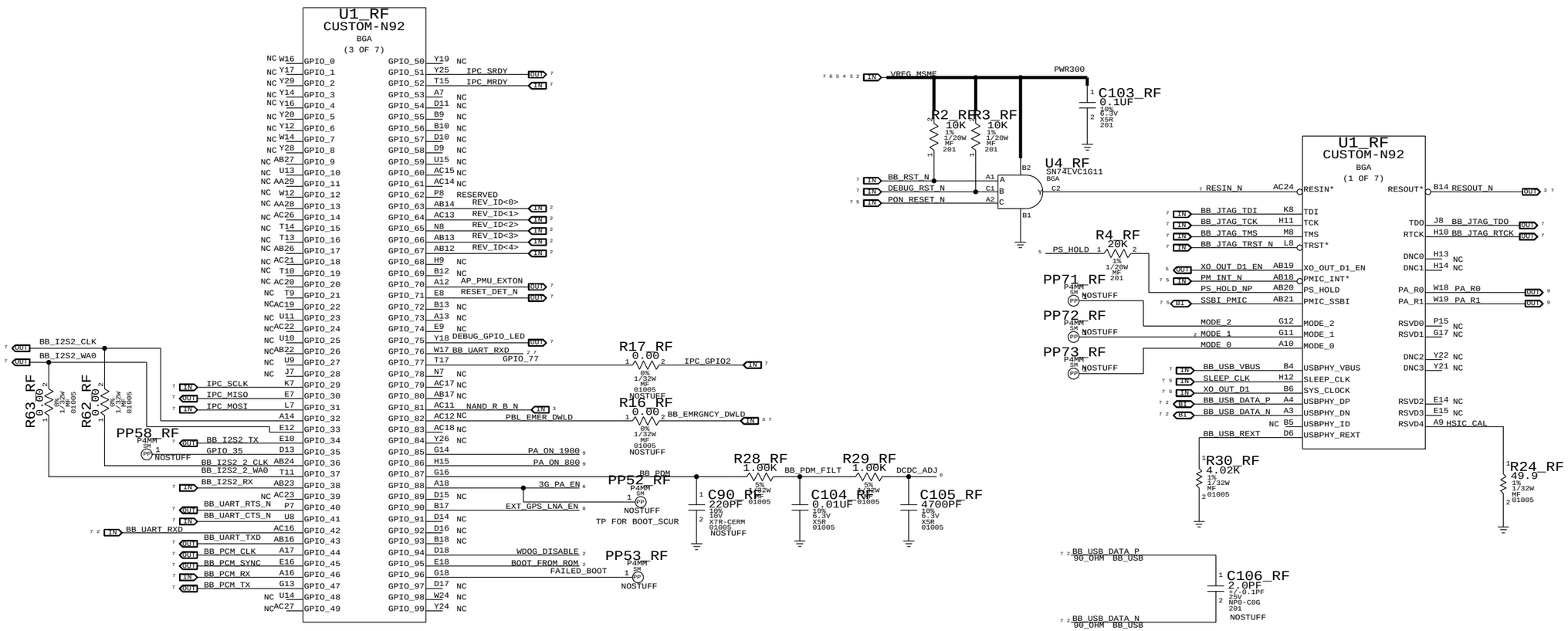

REV_ID<4>			HB PA SELECT
0			TQM
1			SKY
NST			ANAD
REV_ID<3>			LB PA SELECT
0			TQM
1			SKY
NST			ANAD
REV_ID<2..0>			
0	0	0	DEV 1
0	0	1	DEV 2
0	1	0	DEV 3
NST	0	0	DEV 4
NST	0	1	DEV 4B
NST	1	0	DEV 5
NST	1	1	RESERVED
0	1	1	PROT00
1	0	0	PROT01
1	0	1	EVT1
1	1	0	EVT2
1	1	1	EVT3
1	1	NST	DVT
NST	NST	NST	PVT/MP (REV. B)
NST	NST	0	RESERVED

	MODE_1
NST	NATIVE MODE
1	ETM MODE

PAGE 2

BASEBAND MEMORY

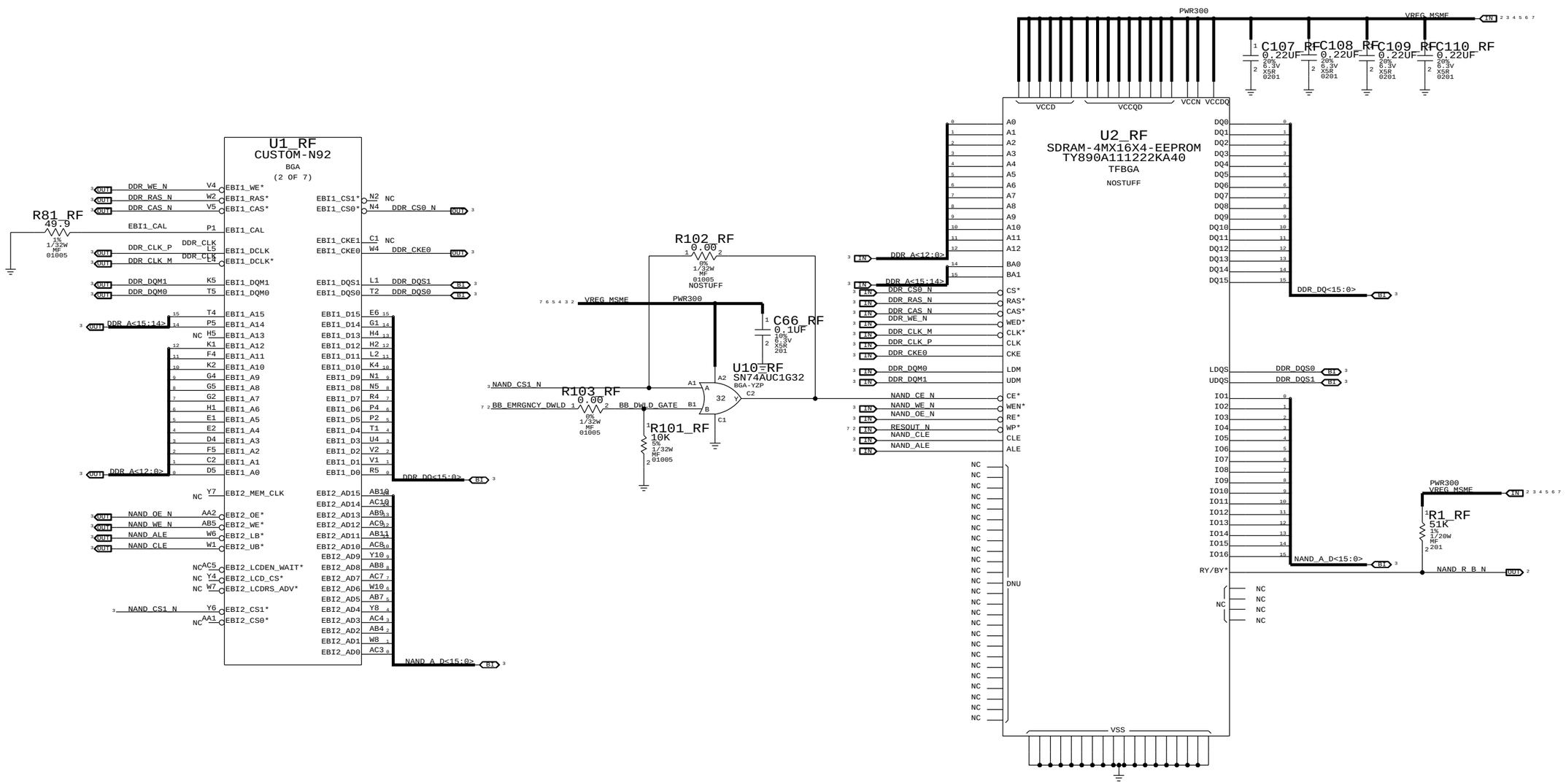

PAGE 3

BASEBAND POWER

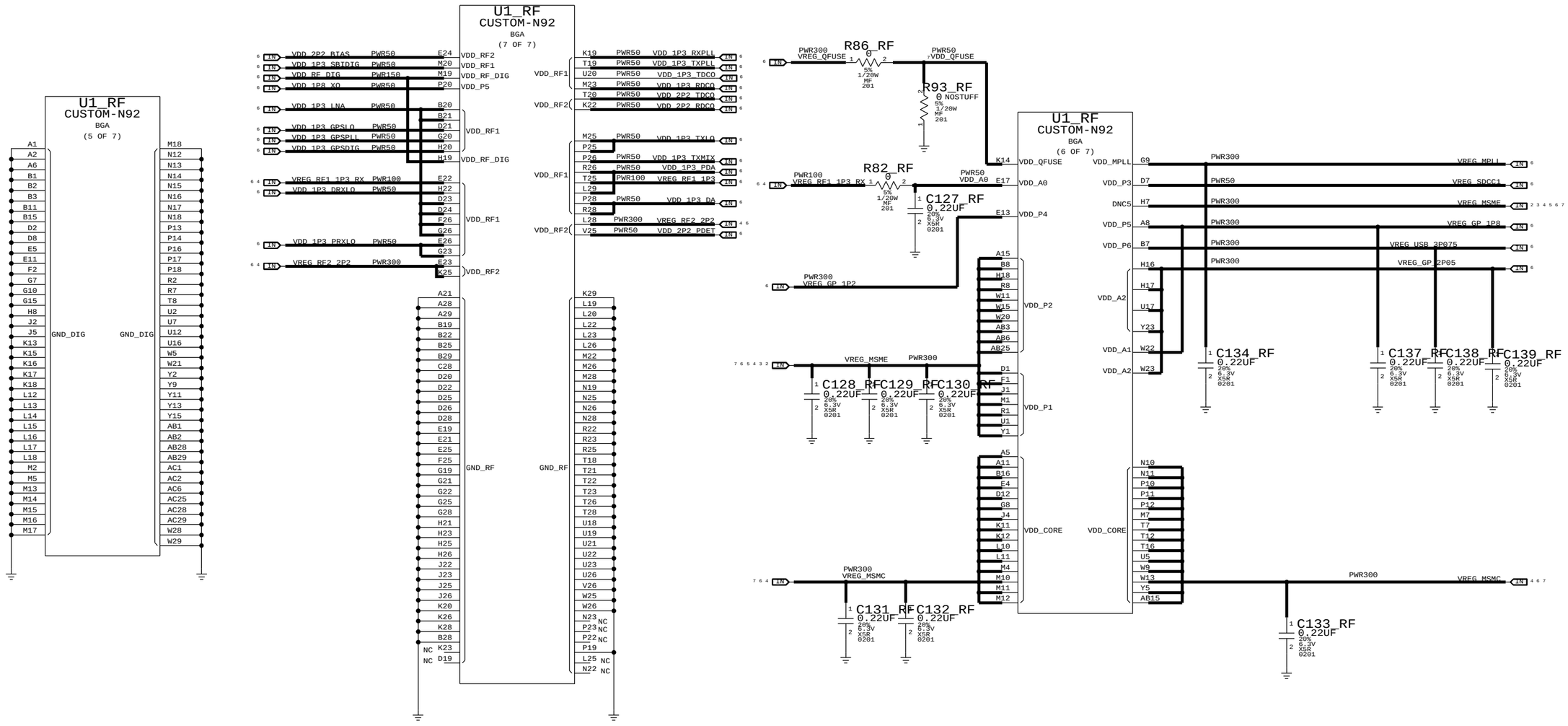

POWER1: CONTROL

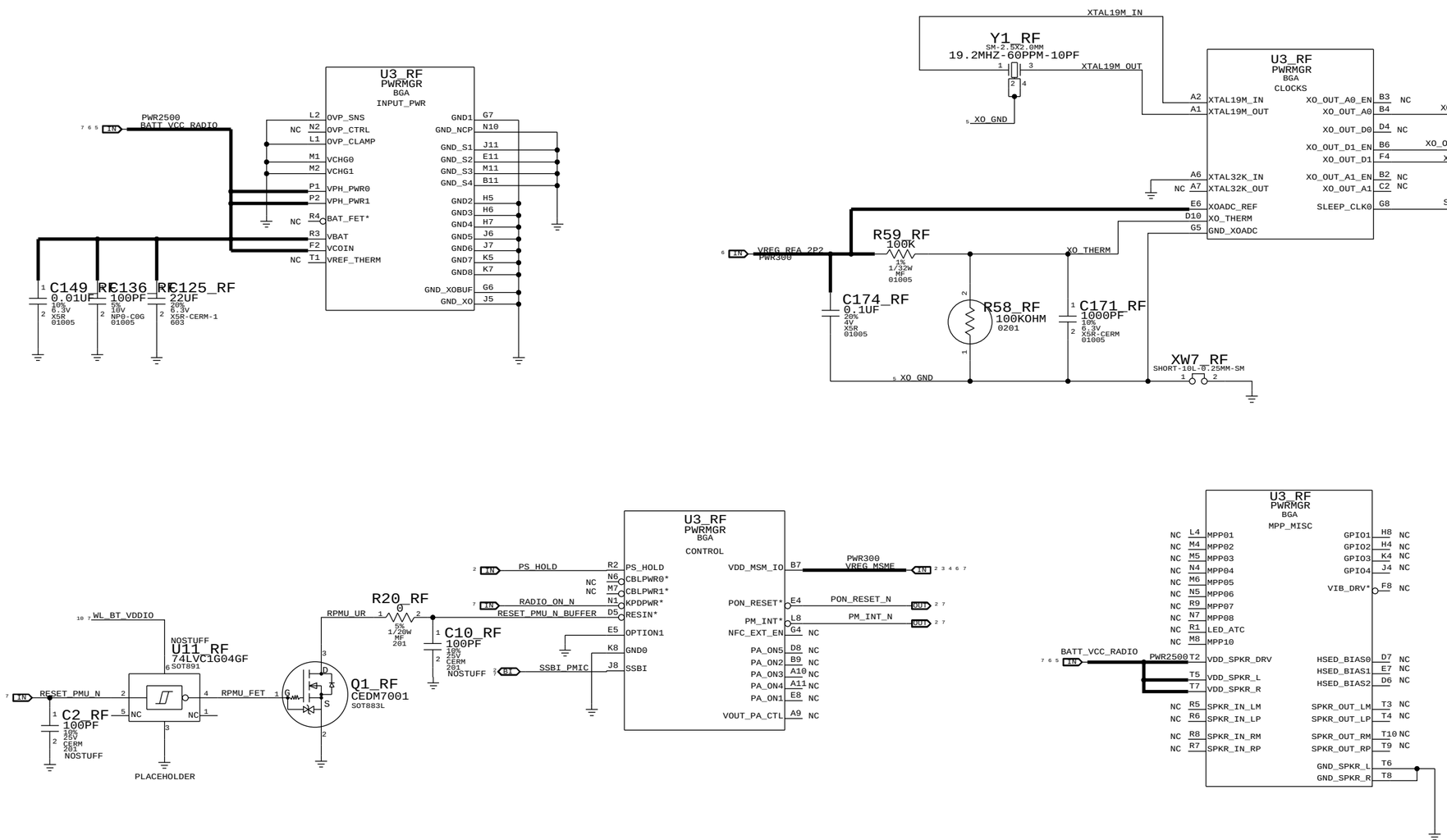

POWER2: DIGITAL, ANALOG, RF

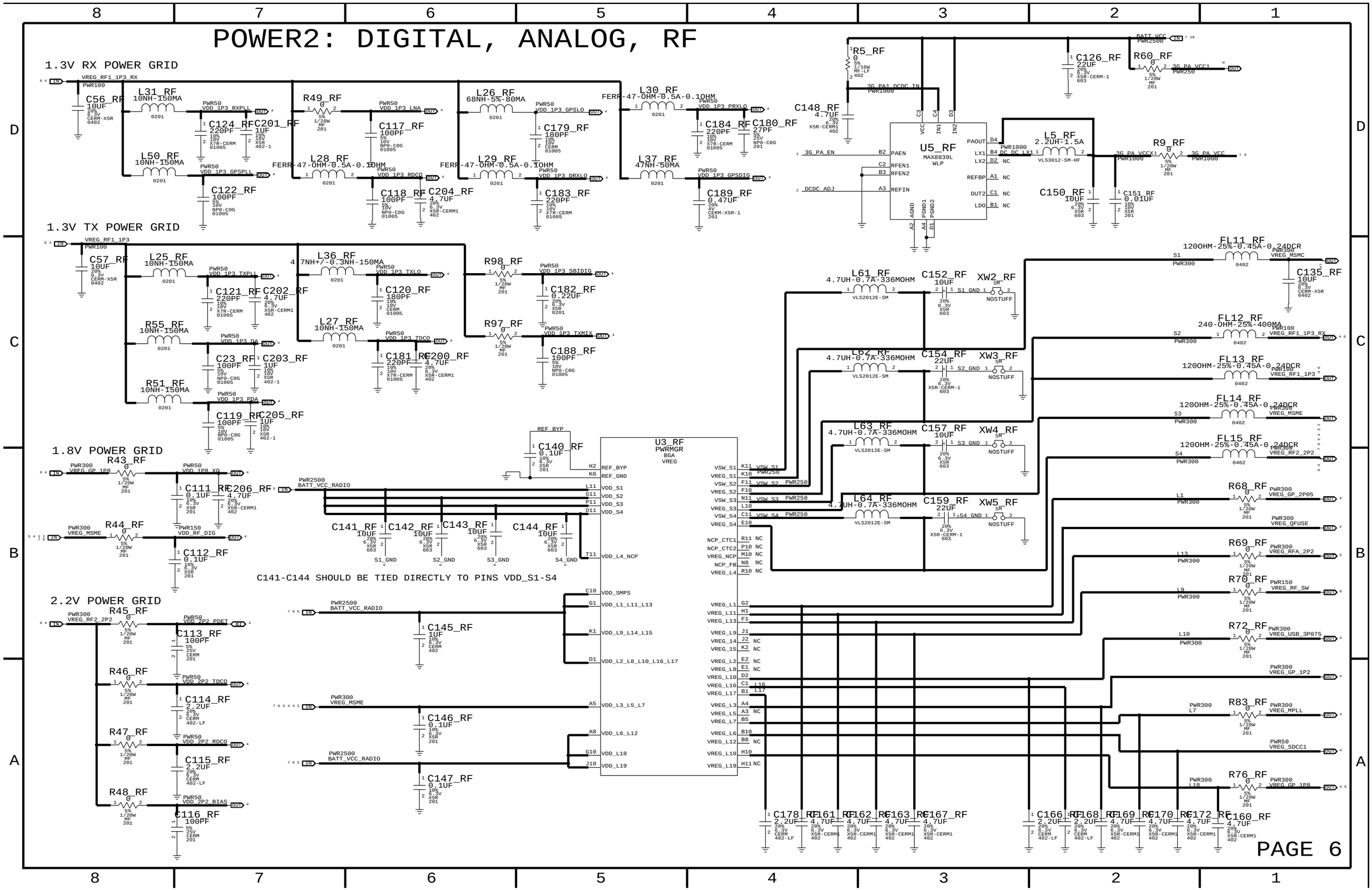

SYSTEM CONNECTORS

AP CONNECTIONS

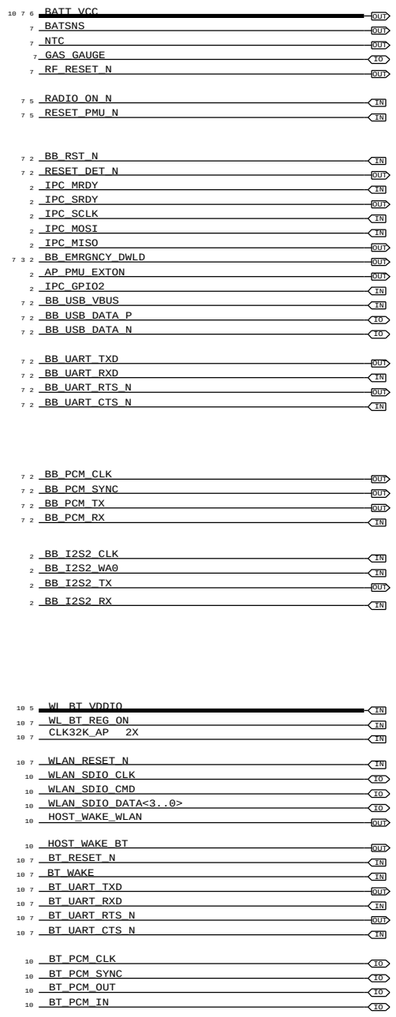

WLAN

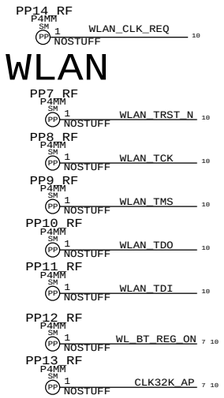

DIGITAL AUDIO

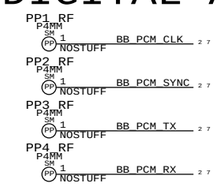

PMIC

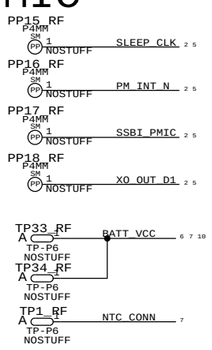

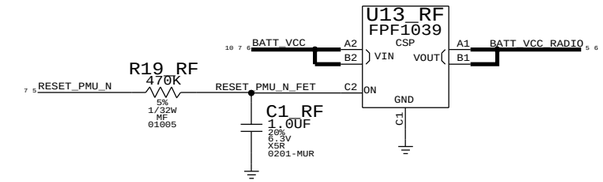

DEBUG CONNECTOR

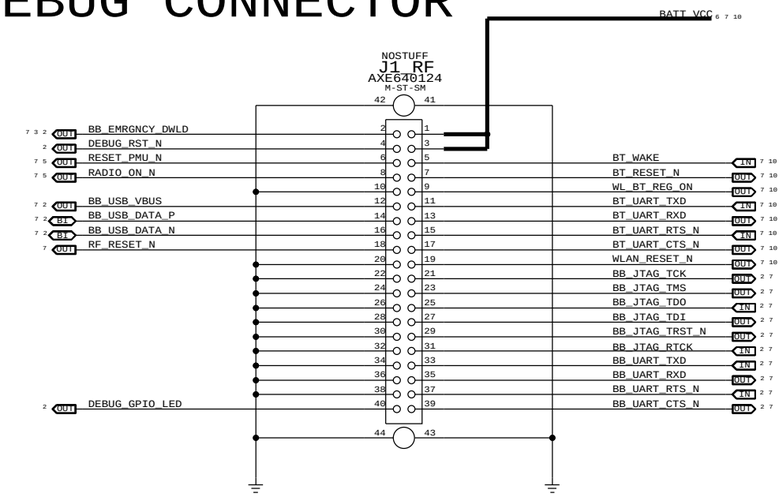

CONTROL

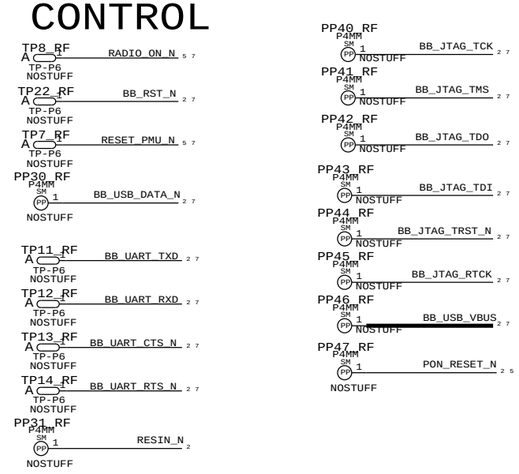

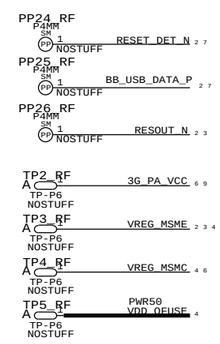

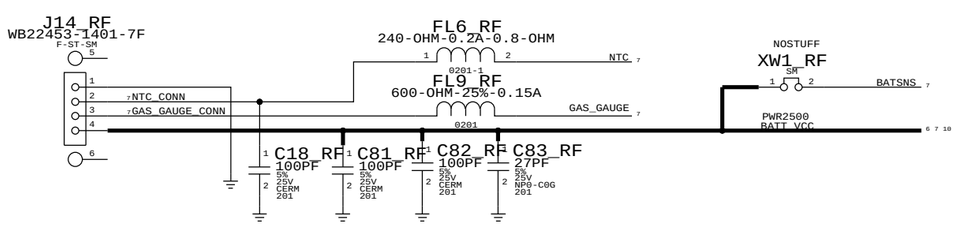

GAS GAUGE

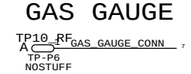

RX DIVERSITY & GPS LNA

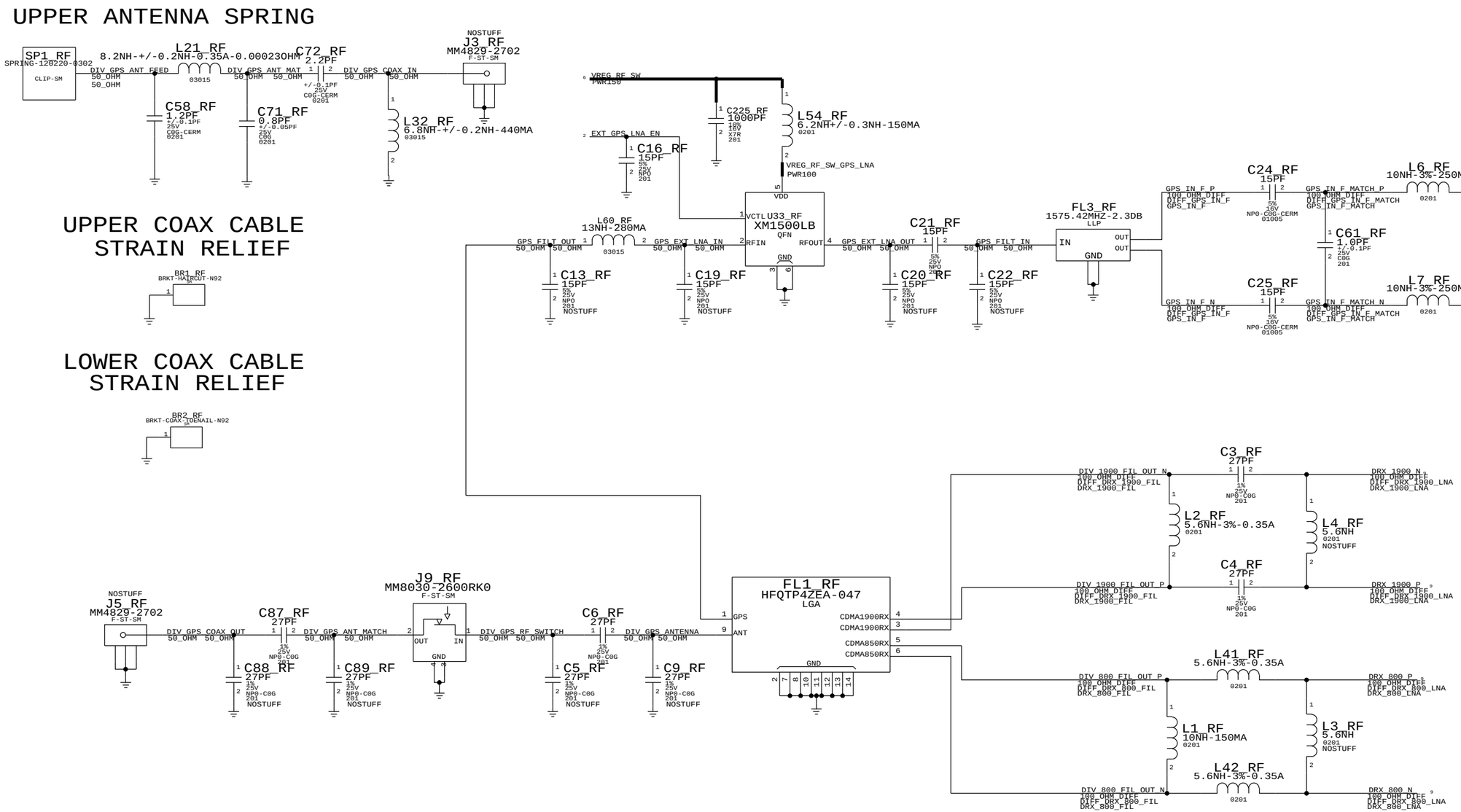

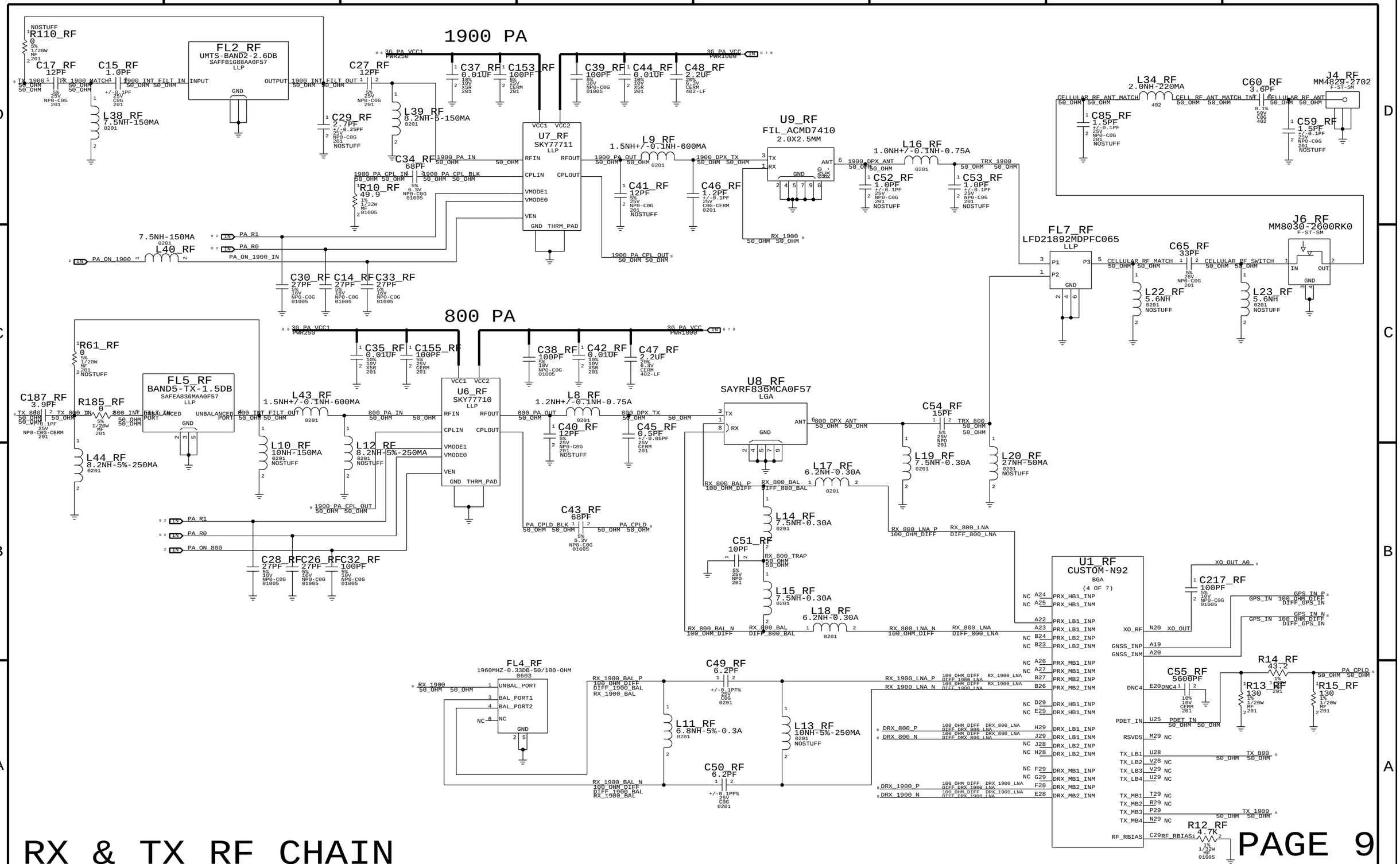

RX & TX RF CHAIN

PAGE 9

WLAN/BLUETOOTH RADIO

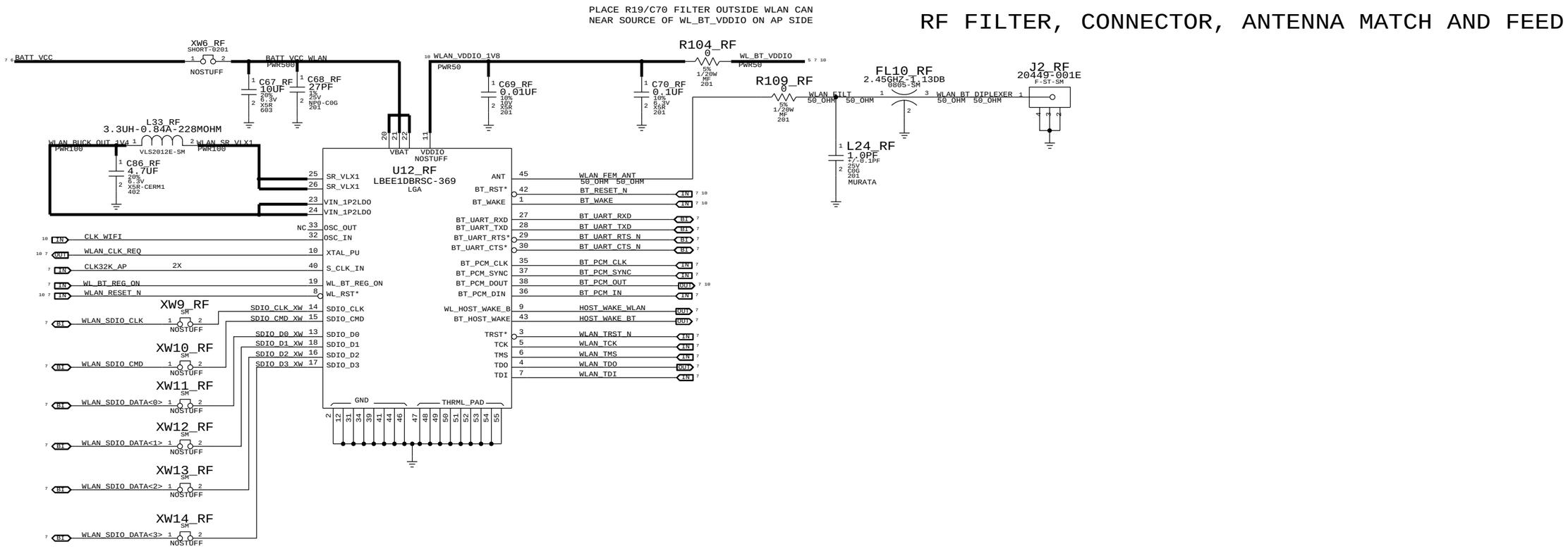

REFERENCE OSCILLATOR TCXO

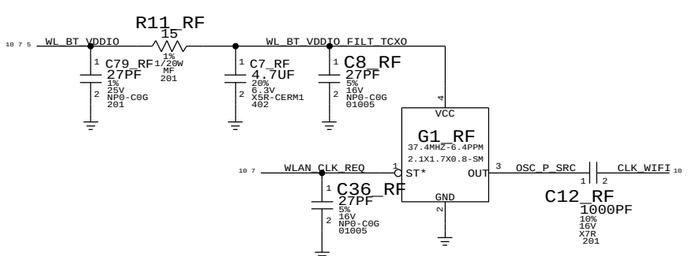

PULL UP RESISTORS

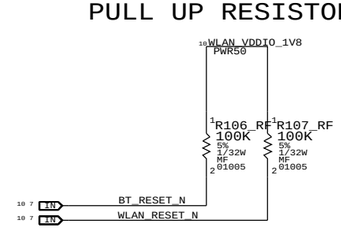

PULL DOWN RESISTORS

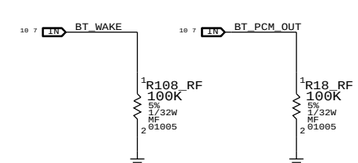

Title: Basenet Report
Design: radio_mlb
Date: Dec 17 16:28:43 2010

Base nets and synonyms for
radio_mlb_lib.RADIO_MLB(@radio_mlb_lib.radio_mlb(sch_1))

Base Signal	Synonyms	Location([Zone][dir])
3G_PA1_DCDC_IN	3G_PA1_DCDC_IN - @radio_mlb_lib.RADIO_MLB	6D3
3G_PA_EN	3G_PA_EN - @radio_mlb_lib.RADIO_MLB	2B6 6D4
3G_PA_VCC	3G_PA_VCC - @radio_mlb_lib.RADIO_MLB	6D1 7B4 9C4 9D4
3G_PA_VCC1	3G_PA_VCC1 - @radio_mlb_lib.RADIO_MLB	6D1 9C7 9D6
3G_PA_VCCX	3G_PA_VCCX - @radio_mlb_lib.RADIO_MLB	6D2
800_DPX_ANT	800_DPX_ANT - @radio_mlb_lib.RADIO_MLB	9C4
800_DPX_TX	800_DPX_TX - @radio_mlb_lib.RADIO_MLB	9C5
800_INT_FILT_IN	800_INT_FILT_IN - @radio_mlb_lib.RADIO_MLB	9C8
800_INT_FILT_OUT	800_INT_FILT_OUT - @radio_mlb_lib.RADIO_MLB	9C7
800_PA_IN	800_PA_IN - @radio_mlb_lib.RADIO_MLB	9C6
800_PA_OUT	800_PA_OUT - @radio_mlb_lib.RADIO_MLB	9C5
1900_DPX_ANT	1900_DPX_ANT - @radio_mlb_lib.RADIO_MLB	9D4
1900_DPX_TX	1900_DPX_TX - @radio_mlb_lib.RADIO_MLB	9D4
1900_INT_FILT_IN	1900_INT_FILT_IN - @radio_mlb_lib.RADIO_MLB	9D8
1900_INT_FILT_OUT	1900_INT_FILT_OUT - @radio_mlb_lib.RADIO_MLB	9D7
1900_PA_CPL_BLK	1900_PA_CPL_BLK - @radio_mlb_lib.RADIO_MLB	9D6
1900_PA_CPL_IN	1900_PA_CPL_IN - @radio_mlb_lib.RADIO_MLB	9D6
1900_PA_CPL_OUT	1900_PA_CPL_OUT - @radio_mlb_lib.RADIO_MLB	9B7 9C5
1900_PA_IN	1900_PA_IN - @radio_mlb_lib.RADIO_MLB	9D6
1900_PA_OUT	1900_PA_OUT - @radio_mlb_lib.RADIO_MLB	9D5
AP_PMU_EXTON	AP_PMU_EXTON - @radio_mlb_lib.RADIO_MLB	2C6 7C8
BATSNS	BATSNS - @radio_mlb_lib.RADIO_MLB	7A5 7D8
BATT_VCC	BATT_VCC - @radio_mlb_lib.RADIO_MLB	6D2 7A5 7B5 7D2 7D3 7D8 10D8
BATT_VCC_RADIO	BATT_VCC_RADIO - @radio_mlb_lib.RADIO_MLB	5B4 5C8 6A7 6B7 6B7 7D2
BATT_VCC_WLAN	BATT_VCC_WLAN - @radio_mlb_lib.RADIO_MLB	10D7
BB_DWLD_GATE	BB_DWLD_GATE - @radio_mlb_lib.RADIO_MLB	3C5
BB_EMRGNCY_DWLD	BB_EMRGNCY_DWLD - @radio_mlb_lib.RADIO_MLB	2C5 3C6 7C4 7C8
BB_I2S2_2_CLK	BB_I2S2_2_CLK - @radio_mlb_lib.RADIO_MLB	2B8
BB_I2S2_2_WA0	BB_I2S2_2_WA0 - @radio_mlb_lib.RADIO_MLB	2B8
BB_I2S2_CLK	BB_I2S2_CLK - @radio_mlb_lib.RADIO_MLB	2C8 7C8
BB_I2S2_RX	BB_I2S2_RX - @radio_mlb_lib.RADIO_MLB	2B8 7C8
BB_I2S2_TX	BB_I2S2_TX - @radio_mlb_lib.RADIO_MLB	2C8 7C8
BB_I2S2_WA0	BB_I2S2_WA0 - @radio_mlb_lib.RADIO_MLB	2C8 7C8
BB_JTAG_RTCK	BB_JTAG_RTCK - @radio_mlb_lib.RADIO_MLB	2C2 7A1 7C2
BB_JTAG_TCK	BB_JTAG_TCK - @radio_mlb_lib.RADIO_MLB	2C3 7B1 7C2
BB_JTAG_TDI	BB_JTAG_TDI - @radio_mlb_lib.RADIO_MLB	2C3 7B1 7C2
BB_JTAG_TDO	BB_JTAG_TDO - @radio_mlb_lib.RADIO_MLB	2C2 7B1 7C2
BB_JTAG_TMS	BB_JTAG_TMS - @radio_mlb_lib.RADIO_MLB	2C3 7B1 7C2
BB_JTAG_TRST_N	BB_JTAG_TRST_N - @radio_mlb_lib.RADIO_MLB	2C3 7B1 7C2
BB_PCM_CLK	BB_PCM_CLK - @radio_mlb_lib.RADIO_MLB	2B8 7C5 7C8
BB_PCM_RX	BB_PCM_RX - @radio_mlb_lib.RADIO_MLB	2B8 7B5 7C8
BB_PCM_SYNC	BB_PCM_SYNC - @radio_mlb_lib.RADIO_MLB	2B8 7C5 7C8
BB_PCM_TX	BB_PCM_TX - @radio_mlb_lib.RADIO_MLB	2B8 7C5 7C8
BB_PDM	BB_PDM - @radio_mlb_lib.RADIO_MLB	2B6
BB_PDM_FILT	BB_PDM_FILT - @radio_mlb_lib.RADIO_MLB	2B5
BB_RST_N	BB_RST_N - @radio_mlb_lib.RADIO_MLB	2C5 7B2 7D8
BB_UART_CTS_N	BB_UART_CTS_N - @radio_mlb_lib.RADIO_MLB	2B8 7A2 7C2 7C8
BB_UART_RTS_N	BB_UART_RTS_N - @radio_mlb_lib.RADIO_MLB	2B8 7A2 7C2 7C8
BB_UART_RXD	BB_UART_RXD - @radio_mlb_lib.RADIO_MLB	2B8 2C6 7A2 7C2 7C8
BB_UART_TXD	BB_UART_TXD - @radio_mlb_lib.RADIO_MLB	2B8 7B2 7C2 7C8
BB_USB_DATA_N	BB_USB_DATA_N - @radio_mlb_lib.RADIO_MLB	2B4 2C3 7B2 7C4 7C8
BB_USB_DATA_P	BB_USB_DATA_P - @radio_mlb_lib.RADIO_MLB	2B4 2C3 7B4 7C4 7C8
BB_USB_REXT	BB_USB_REXT - @radio_mlb_lib.RADIO_MLB	2C3
BB_USB_VBUS	BB_USB_VBUS - @radio_mlb_lib.RADIO_MLB	2C3 7A1 7C4 7C8
BOOT_FROM_ROM	BOOT_FROM_ROM - @radio_mlb_lib.RADIO_MLB	2A5 2B6
BT_PCM_CLK	BT_PCM_CLK - @radio_mlb_lib.RADIO_MLB	7B8 10C5
BT_PCM_IN	BT_PCM_IN - @radio_mlb_lib.RADIO_MLB	7B8 10C5
BT_PCM_OUT	BT_PCM_OUT - @radio_mlb_lib.RADIO_MLB	7B8 10A3 10C5
BT_PCM_SYNC	BT_PCM_SYNC - @radio_mlb_lib.RADIO_MLB	7B8 10C5
BT_RESET_N	BT_RESET_N - @radio_mlb_lib.RADIO_MLB	7B8 7C2 10A5 10C5
BT_UART_CTS_N	BT_UART_CTS_N - @radio_mlb_lib.RADIO_MLB	7B8 7C2 10C5
BT_UART_RTS_N	BT_UART_RTS_N - @radio_mlb_lib.RADIO_MLB	7B8 7C2 10C5
BT_UART_RXD	BT_UART_RXD - @radio_mlb_lib.RADIO_MLB	7B8 7C2 10C5
BT_UART_TXD	BT_UART_TXD - @radio_mlb_lib.RADIO_MLB	7B8 7C2 10C5
BT_WAKE	BT_WAKE - @radio_mlb_lib.RADIO_MLB	7B8 7C2 10A4 10C5
CELLULAR_RF_ANT	CELLULAR_RF_ANT - @radio_mlb_lib.RADIO_MLB	9D1
CELLULAR_RF_ANT_MATCH	CELLULAR_RF_ANT_MATCH - @radio_mlb_lib.RADIO_MLB	9D2
CELLULAR_RF_MATCH	CELLULAR_RF_MATCH - @radio_mlb_lib.RADIO_MLB	9C2
CELLULAR_RF_SWITCH	CELLULAR_RF_SWITCH - @radio_mlb_lib.RADIO_MLB	9C2
CELL_RF_ANT_MATCH_INT	CELL_RF_ANT_MATCH_INT - @radio_mlb_lib.RADIO_MLB	9D2
CLK32K_AP	CLK32K_AP - @radio_mlb_lib.RADIO_MLB	7B8 7C5 10C8
CLK_WIFI	CLK_WIFI - @radio_mlb_lib.RADIO_MLB	10A6 10C8
DCDC_ADJ	DCDC_ADJ - @radio_mlb_lib.RADIO_MLB	2B4 6D4
DC_DC_LX1	DC_DC_LX1 - @radio_mlb_lib.RADIO_MLB	6D3
DDR_A<12..0>	DDR_A<12..0> - @radio_mlb_lib.RADIO_MLB	3B8 3C4
DDR_A<15..14>	DDR_A<15..14> - @radio_mlb_lib.RADIO_MLB	3C4 3C8
DDR_CAS_N	DDR_CAS_N - @radio_mlb_lib.RADIO_MLB	3C4 3C8
DDR_CKE0	DDR_CKE0 - @radio_mlb_lib.RADIO_MLB	3C4 3C6
DDR_CLK_M	DDR_CLK_M - @radio_mlb_lib.RADIO_MLB	3C4 3C8
DDR_CLK_P	DDR_CLK_P - @radio_mlb_lib.RADIO_MLB	3C4 3C8
DDR_CS0_N	DDR_CS0_N - @radio_mlb_lib.RADIO_MLB	3C4 3C6
DDR_DQ<15..0>	DDR_DQ<15..0> - @radio_mlb_lib.RADIO_MLB	3B6 3C2
DDR_DQM0	DDR_DQM0 - @radio_mlb_lib.RADIO_MLB	3C4 3C8
DDR_DQM1	DDR_DQM1 - @radio_mlb_lib.RADIO_MLB	3C4 3C8
DDR_DQS0	DDR_DQS0 - @radio_mlb_lib.RADIO_MLB	3C2 3C6
DDR_DQS1	DDR_DQS1 - @radio_mlb_lib.RADIO_MLB	3C2 3C6
DDR_RAS_N	DDR_RAS_N - @radio_mlb_lib.RADIO_MLB	3C4 3C8
DDR_WE_N	DDR_WE_N - @radio_mlb_lib.RADIO_MLB	3C4 3C8
DEBUG_GPIO_LED	DEBUG_GPIO_LED - @radio_mlb_lib.RADIO_MLB	2C6 7C4
DEBUG_RST_N	DEBUG_RST_N - @radio_mlb_lib.RADIO_MLB	2C5 7C4
DIV_800_FIL_OUT_N	DIV_800_FIL_OUT_N - @radio_mlb_lib.RADIO_MLB	8A4
DIV_800_FIL_OUT_P	DIV_800_FIL_OUT_P - @radio_mlb_lib.RADIO_MLB	8A4
DIV_1900_FIL_OUT_N	DIV_1900_FIL_OUT_N - @radio_mlb_lib.RADIO_MLB	8B4
DIV_1900_FIL_OUT_P	DIV_1900_FIL_OUT_P - @radio_mlb_lib.RADIO_MLB	8B4
DIV_GPS_ANTENNA	DIV_GPS_ANTENNA - @radio_mlb_lib.RADIO_MLB	8B6
DIV_GPS_ANT_FEED	DIV_GPS_ANT_FEED - @radio_mlb_lib.RADIO_MLB	8D8
DIV_GPS_ANT_MAT	DIV_GPS_ANT_MAT - @radio_mlb_lib.RADIO_MLB	8D7
DIV_GPS_ANT_MATCH	DIV_GPS_ANT_MATCH - @radio_mlb_lib.RADIO_MLB	8B7
DIV_GPS_COAX_IN	DIV_GPS_COAX_IN - @radio_mlb_lib.RADIO_MLB	8D7
DIV_GPS_COAX_OUT	DIV_GPS_COAX_OUT - @radio_mlb_lib.RADIO_MLB	8B8
DIV_GPS_RF_SWITCH	DIV_GPS_RF_SWITCH - @radio_mlb_lib.RADIO_MLB	8B6
DNC4	DNC4 - @radio_mlb_lib.RADIO_MLB	9A2
DRX_800_N	DRX_800_N - @radio_mlb_lib.RADIO_MLB	8A2 9A3
DRX_800_P	DRX_800_P - @radio_mlb_lib.RADIO_MLB	8A2 9A3
DRX_1900_N	DRX_1900_N - @radio_mlb_lib.RADIO_MLB	8B2 9A3
DRX_1900_P	DRX_1900_P - @radio_mlb_lib.RADIO_MLB	8B2 9A3
EBI1_CAL	EBI1_CAL - @radio_mlb_lib.RADIO_MLB	3C8
EXT_GPS_LNA_EN	EXT_GPS_LNA_EN - @radio_mlb_lib.RADIO_MLB	2B6 8C6
FAILED_BOOT	FAILED_BOOT - @radio_mlb_lib.RADIO_MLB	2B6
GAS_GAUGE	GAS_GAUGE - @radio_mlb_lib.RADIO_MLB	7A6 7D8
GAS_GAUGE_CONN	GAS_GAUGE_CONN - @radio_mlb_lib.RADIO_MLB	7A4 7A8
GPIO_35	GPIO_35 - @radio_mlb_lib.RADIO_MLB	2B7
GPIO_77	GPIO_77 - @radio_mlb_lib.RADIO_MLB	2C6
GPS_EXT_LNA_IN	GPS_EXT_LNA_IN - @radio_mlb_lib.RADIO_MLB	8C5
GPS_EXT_LNA_OUT	GPS_EXT_LNA_OUT - @radio_mlb_lib.RADIO_MLB	8C5
GPS_FILT_IN	GPS_FILT_IN - @radio_mlb_lib.RADIO_MLB	8C4
GPS_FILT_OUT	GPS_FILT_OUT - @radio_mlb_lib.RADIO_MLB	8C6
GPS_IN_F_MATCH_N	GPS_IN_F_MATCH_N - @radio_mlb_lib.RADIO_MLB	8C3
GPS_IN_F_MATCH_P	GPS_IN_F_MATCH_P - @radio_mlb_lib.RADIO_MLB	8C3
GPS_IN_F_N	GPS_IN_F_N - @radio_mlb_lib.RADIO_MLB	8C3
GPS_IN_F_P	GPS_IN_F_P - @radio_mlb_lib.RADIO_MLB	8C3
GPS_IN_N	GPS_IN_N - @radio_mlb_lib.RADIO_MLB	8C1 9B1
GPS_IN_P	GPS_IN_P - @radio_mlb_lib.RADIO_MLB	8C1 9B1
HOST_WAKE_BT	HOST_WAKE_BT - @radio_mlb_lib.RADIO_MLB	7B8 10C5
HOST_WAKE_WLAN	HOST_WAKE_WLAN - @radio_mlb_lib.RADIO_MLB	7B8 10C5
HSIC_CAL	HSIC_CAL - @radio_mlb_lib.RADIO_MLB	2C2
IPC_GPIO2	IPC_GPIO2 - @radio_mlb_lib.RADIO_MLB	2C5 7C8
IPC_MISO	IPC_MISO - @radio_mlb_lib.RADIO_MLB	2C8 7D8
IPC_MOSI	IPC_MOSI - @radio_mlb_lib.RADIO_MLB	2C8 7D8
IPC_MRDY	IPC_MRDY - @radio_mlb_lib.RADIO_MLB	2D6 7D8
IPC_SCLK	IPC_SCLK - @radio_mlb_lib.RADIO_MLB	2C8 7D8
IPC_SRDY	IPC_SRDY - @radio_mlb_lib.RADIO_MLB	2D6 7D8
L1	L1 - @radio_mlb_lib.RADIO_MLB	6B2
L7	L7 - @radio_mlb_lib.RADIO_MLB	6A2
L9	L9 - @radio_mlb_lib.RADIO_MLB	6B2
L10	L10 - @radio_mlb_lib.RADIO_MLB	6B2
L13	L13 - @radio_mlb_lib.RADIO_MLB	6B2
L16	L16 - @radio_mlb_lib.RADIO_MLB	6A4
L17	L17 - @radio_mlb_lib.RADIO_MLB	6A4
L18	L18 - @radio_mlb_lib.RADIO_MLB	6A2
MODE_0	MODE_0 - @radio_mlb_lib.RADIO_MLB	2C3
MODE_1	MODE_1 - @radio_mlb_lib.RADIO_MLB	2A5 2C3
MODE_2	MODE_2 - @radio_mlb_lib.RADIO_MLB	2C3
NAND_ALE	NAND_ALE - @radio_mlb_lib.RADIO_MLB	3B4 3B8
NAND_A_D<15..0>	NAND_A_D<15..0> - @radio_mlb_lib.RADIO_MLB	3B2 3B6
NAND_CE_N	NAND_CE_N - @radio_mlb_lib.RADIO_MLB	3C4
NAND_CLE	NAND_CLE - @radio_mlb_lib.RADIO_MLB	3B4 3B8
NAND_CS1_N	NAND_CS1_N - @radio_mlb_lib.RADIO_MLB	3B8 3C6
NAND_OE_N	NAND_OE_N - @radio_mlb_lib.RADIO_MLB	3B4 3B8
NAND_R_B_N	NAND_R_B_N - @radio_mlb_lib.RADIO_MLB	2C6 3B1
NAND_WE_N	NAND_WE_N - @radio_mlb_lib.RADIO_MLB	3B8 3C4
NTC	NTC - @radio_mlb_lib.RADIO_MLB	7A6 7D8
NTC_CONN	NTC_CONN - @radio_mlb_lib.RADIO_MLB	7A5 7A8
OSC_P_SRC	OSC_P_SRC - @radio_mlb_lib.RADIO_MLB	10A7
PA_CPLD	PA_CPLD - @radio_mlb_lib.RADIO_MLB	9A1 9B5
PA_CPLD_BLK	PA_CPLD_BLK - @radio_mlb_lib.RADIO_MLB	9B5
PA_ON_800	PA_ON_800 - @radio_mlb_lib.RADIO_MLB	2B6 9B7
PA_ON_1900	PA_ON_1900 - @radio_mlb_lib.RADIO_MLB	2B6 9C8
PA_ON_1900_IN	PA_ON_1900_IN - @radio_mlb_lib.RADIO_MLB	9C7
PA_R0	PA_R0 - @radio_mlb_lib.RADIO_MLB	2C2 9B7 9C7
PA_R1	PA_R1 - @radio_mlb_lib.RADIO_MLB	2C2 9B7 9C7
PBL_EMER_DWLD	PBL_EMER_DWLD - @radio_mlb_lib.RADIO_MLB	2C6
PDET_IN	PDET_IN - @radio_mlb_lib.RADIO_MLB	9A2
PM_INT_N	PM_INT_N - @radio_mlb_lib.RADIO_MLB	2C3 5B4 7B5
PON_RESET_N	PON_RESET_N - @radio_mlb_lib.RADIO_MLB	2C5 5B4 7A1
PS_HOLD	PS_HOLD - @radio_mlb_lib.RADIO_MLB	2C4 5B6
PS_HOLD_NP	PS_HOLD_NP - @radio_mlb_lib.RADIO_MLB	2C3
RADIO_ON_N	RADIO_ON_N - @radio_mlb_lib.RADIO_MLB	5B6 7B2 7C4 7D8
REF_BYP	REF_BYP - @radio_mlb_lib.RADIO_MLB	6C5
RESET_DET_N	RESET_DET_N - @radio_mlb_lib.RADIO_MLB	2C6 7B4 7D8
RESET_PMU_N	RESET_PMU_N - @radio_mlb_lib.RADIO_MLB	5A8 7B2 7C4 7D3 7D8
RESET_PMU_N_BUFFER	RESET_PMU_N_BUFFER - @radio_mlb_lib.RADIO_MLB	5B6
RESET_PMU_N_FET	RESET_PMU_N_FET - @radio_mlb_lib.RADIO_MLB	7D3
RESIN_N	RESIN_N - @radio_mlb_lib.RADIO_MLB	2C3 7A2
RESOUT_N	RESOUT_N - @radio_mlb_lib.RADIO_MLB	2C2 3B4 7B4
REV_ID<0>	REV_ID<0> - @radio_mlb_lib.RADIO_MLB	2A8 2C6
REV_ID<1>	REV_ID<1> - @radio_mlb_lib.RADIO_MLB	2A8 2C6
REV_ID<2>	REV_ID<2> - @radio_mlb_lib.RADIO_MLB	2A8 2C6
REV_ID<3>	REV_ID<3> - @radio_mlb_lib.RADIO_MLB	2A8 2C6
REV_ID<4>	REV_ID<4> - @radio_mlb_lib.RADIO_MLB	2A8 2C6
RF_RBIAS	RF_RBIAS - @radio_mlb_lib.RADIO_MLB	9A2
RF_RESET_N	RF_RESET_N - @radio_mlb_lib.RADIO_MLB	7C4 7D8
RPMU_FET	RPMU_FET - @radio_mlb_lib.RADIO_MLB	5A7
RPMU_UR	RPMU_UR - @radio_mlb_lib.RADIO_MLB	5B7
RX_800_BAL_N	RX_800_BAL_N - @radio_mlb_lib.RADIO_MLB	9B5
RX_800_BAL_P	RX_800_BAL_P - @radio_mlb_lib.RADIO_MLB	9B4
RX_800_LNA_N	RX_800_LNA_N - @radio_mlb_lib.RADIO_MLB	9B3
RX_800_LNA_P	RX_800_LNA_P - @radio_mlb_lib.RADIO_MLB	9B3
RX_800_TRAP	RX_800_TRAP - @radio_mlb_lib.RADIO_MLB	9B4
RX_1900	RX_1900 - @radio_mlb_lib.RADIO_MLB	9A6 9C4
RX_1900_BAL_N	RX_1900_BAL_N - @radio_mlb_lib.RADIO_MLB	9A5
RX_1900_BAL_P	RX_1900_BAL_P - @radio_mlb_lib.RADIO_MLB	9A5
RX_1900_LNA_N	RX_1900_LNA_N - @radio_mlb_lib.RADIO_MLB	9A3
RX_1900_LNA_P	RX_1900_LNA_P - @radio_mlb_lib.RADIO_MLB	9A3
S1	S1 - @radio_mlb_lib.RADIO_MLB	6C2
S1_GND	S1_GND - @radio_mlb_lib.RADIO_MLB	6B6 6C3
S2	S2 - @radio_mlb_lib.RADIO_MLB	6C2
S2_GND	S2_GND - @radio_mlb_lib.RADIO_MLB	6B6 6C3
S3	S3 - @radio_mlb_lib.RADIO_MLB	6C2
S3_GND	S3_GND - @radio_mlb_lib.RADIO_MLB	6B6 6C3
S4	S4 - @radio_mlb_lib.RADIO_MLB	6B2
S4_GND	S4_GND - @radio_mlb_lib.RADIO_MLB	6B3 6B5
SDIO_CLK_XW	SDIO_CLK_XW - @radio_mlb_lib.RADIO_MLB	10C7
SDIO_CMD_XW	SDIO_CMD_XW - @radio_mlb_lib.RADIO_MLB	10C7
SDIO_D0_XW	SDIO_D0_XW - @radio_mlb_lib.RADIO_MLB	10C7
SDIO_D1_XW	SDIO_D1_XW - @radio_mlb_lib.RADIO_MLB	10C7
SDIO_D2_XW	SDIO_D2_XW - @radio_mlb_lib.RADIO_MLB	10C7
SDIO_D3_XW	SDIO_D3_XW - @radio_mlb_lib.RADIO_MLB	10C7
SLEEP_CLK	SLEEP_CLK - @radio_mlb_lib.RADIO_MLB	2C3 5C2 7B5
SSBI_PMIC	SSBI_PMIC - @radio_mlb_lib.RADIO_MLB	2C3 5B6 7B5
TRX_800	TRX_800 - @radio_mlb_lib.RADIO_MLB	9C3
TRX_1900	TRX_1900 - @radio_mlb_lib.RADIO_MLB	9D3
TX_800	TX_800 - @radio_mlb_lib.RADIO_MLB	9A1 9C8
TX_800_IN	TX_800_IN - @radio_mlb_lib.RADIO_MLB	9C8
TX_1900	TX_1900 - @radio_mlb_lib.RADIO_MLB	9A1 9D8
TX_1900_MATCH	TX_1900_MATCH - @radio_mlb_lib.RADIO_MLB	9D8
VDD_1P3_DA	VDD_1P3_DA - @radio_mlb_lib.RADIO_MLB	4C4 6C7
VDD_1P3_DRXLO	VDD_1P3_DRXLO - @radio_mlb_lib.RADIO_MLB	4C7 6D5
VDD_1P3_GPSDIG	VDD_1P3_GPSDIG - @radio_mlb_lib.RADIO_MLB	4C7 6D4
VDD_1P3_GPSLO	VDD_1P3_GPSLO - @radio_mlb_lib.RADIO_MLB	4C7 6D5
VDD_1P3_GPSPLL	VDD_1P3_GPSPLL - @radio_mlb_lib.RADIO_MLB	4C7 6D7
VDD_1P3_LNA	VDD_1P3_LNA - @radio_mlb_lib.RADIO_MLB	4C7 6D6
VDD_1P3_PDA	VDD_1P3_PDA - @radio_mlb_lib.RADIO_MLB	4C4 6C7
VDD_1P3_PRXLO	VDD_1P3_PRXLO - @radio_mlb_lib.RADIO_MLB	4C7 6D4
VDD_1P3_RDCO	VDD_1P3_RDCO - @radio_mlb_lib.RADIO_MLB	4C4 6D6
VDD_1P3_RXPLL	VDD_1P3_RXPLL - @radio_mlb_lib.RADIO_MLB	4C4 6D7
VDD_1P3_SBIDIG	VDD_1P3_SBIDIG - @radio_mlb_lib.RADIO_MLB	4C7 6C5
VDD_1P3_TDCO	VDD_1P3_TDCO - @radio_mlb_lib.RADIO_MLB	4C4 6C6
VDD_1P3_TXLO	VDD_1P3_TXLO - @radio_mlb_lib.RADIO_MLB	4C4 6C6
VDD_1P3_TXMIX	VDD_1P3_TXMIX - @radio_mlb_lib.RADIO_MLB	4C4 6C5
VDD_1P3_TXPLL	VDD_1P3_TXPLL - @radio_mlb_lib.RADIO_MLB	4C4 6C7
VDD_1P8_XO	VDD_1P8_XO - @radio_mlb_lib.RADIO_MLB	4C7 6B7
VDD_2P2_BIAS	VDD_2P2_BIAS - @radio_mlb_lib.RADIO_MLB	4C7 6A7
VDD_2P2_PDET	VDD_2P2_PDET - @radio_mlb_lib.RADIO_MLB	4C4 6B7
VDD_2P2_RDCO	VDD_2P2_RDCO - @radio_mlb_lib.RADIO_MLB	4C4 6A7
VDD_2P2_TDCO	VDD_2P2_TDCO - @radio_mlb_lib.RADIO_MLB	4C4 6A7
VDD_A0	VDD_A0 - @radio_mlb_lib.RADIO_MLB	4C3
VDD_QFUSE	VDD_QFUSE - @radio_mlb_lib.RADIO_MLB	4C4 7A4
VDD_RF_DIG	VDD_RF_DIG - @radio_mlb_lib.RADIO_MLB	4C7 6B7
VREG_GP_1P2	VREG_GP_1P2 - @radio_mlb_lib.RADIO_MLB	4C4 6A1
VREG_GP_1P8	VREG_GP_1P8 - @radio_mlb_lib.RADIO_MLB	4C1 6A1 6B8
VREG_GP_2P05	VREG_GP_2P05 - @radio_mlb_lib.RADIO_MLB	4C1 6B1
VREG_MPLL	VREG_MPLL - @radio_mlb_lib.RADIO_MLB	4C1 6A1
VREG_MSMC	VREG_MSMC - @radio_mlb_lib.RADIO_MLB	4B1 4B4 6C1 7A4
VREG_MSME	VREG_MSME - @radio_mlb_lib.RADIO_MLB	2A5 2A8 2D5 3B1 3C5 3D1 4B4 4C1 5B4 6A7 6B8 6C1 7A4
VREG_QFUSE	VREG_QFUSE - @radio_mlb_lib.RADIO_MLB	4C4 6B1
VREG_RF1_1P3	VREG_RF1_1P3 - @radio_mlb_lib.RADIO_MLB	4C4 6C1 6C8
VREG_RF1_1P3_RX	VREG_RF1_1P3_RX - @radio_mlb_lib.RADIO_MLB	4C4 4C7 6C1 6D8
VREG_RF2_2P2	VREG_RF2_2P2 - @radio_mlb_lib.RADIO_MLB	4C4 4C7 6B1 6B8
VREG_RFA_2P2	VREG_RFA_2P2 - @radio_mlb_lib.RADIO_MLB	5C5 6B1
VREG_RF_SW	VREG_RF_SW - @radio_mlb_lib.RADIO_MLB	6B1 8D6
VREG_RF_SW_GPS_LNA	VREG_RF_SW_GPS_LNA - @radio_mlb_lib.RADIO_MLB	8C5
VREG_SDCC1	VREG_SDCC1 - @radio_mlb_lib.RADIO_MLB	4C1 6A1
VREG_USB_3P075	VREG_USB_3P075 - @radio_mlb_lib.RADIO_MLB	4C1 6B1
VSW_S1	VSW_S1 - @radio_mlb_lib.RADIO_MLB	6B4
VSW_S2	VSW_S2 - @radio_mlb_lib.RADIO_MLB	6B4
VSW_S3	VSW_S3 - @radio_mlb_lib.RADIO_MLB	6B4
VSW_S4	VSW_S4 - @radio_mlb_lib.RADIO_MLB	6B4
WDOG_DISABLE	WDOG_DISABLE - @radio_mlb_lib.RADIO_MLB	2A5 2B6
WLAN_BT_DIPLEXER	WLAN_BT_DIPLEXER - @radio_mlb_lib.RADIO_MLB	10D4
WLAN_BUCK_OUT_1V4	WLAN_BUCK_OUT_1V4 - @radio_mlb_lib.RADIO_MLB	10C8
WLAN_CLK_REQ	WLAN_CLK_REQ - @radio_mlb_lib.RADIO_MLB	7D5 10A7 10C8
WLAN_FEM_ANT	WLAN_FEM_ANT - @radio_mlb_lib.RADIO_MLB	10C5
WLAN_FILT	WLAN_FILT - @radio_mlb_lib.RADIO_MLB	10D4
WLAN_RESET_N	WLAN_RESET_N - @radio_mlb_lib.RADIO_MLB	7B8 7C2 10A5 10C8
WLAN_SDIO_CLK	WLAN_SDIO_CLK - @radio_mlb_lib.RADIO_MLB	7B8 10C8
WLAN_SDIO_CMD	WLAN_SDIO_CMD - @radio_mlb_lib.RADIO_MLB	7B8 10C8
WLAN_SDIO_DATA<0>	WLAN_SDIO_DATA<0> - @radio_mlb_lib.RADIO_MLB	10B8
WLAN_SDIO_DATA<3..0>	WLAN_SDIO_DATA<3..0> - @radio_mlb_lib.RADIO_MLB	7B8
WLAN_SDIO_DATA<1>	WLAN_SDIO_DATA<1> - @radio_mlb_lib.RADIO_MLB	10B8
WLAN_SDIO_DATA<2>	WLAN_SDIO_DATA<2> - @radio_mlb_lib.RADIO_MLB	10B8
WLAN_SDIO_DATA<3>	WLAN_SDIO_DATA<3> - @radio_mlb_lib.RADIO_MLB	10B8
WLAN_SR_VLX1	WLAN_SR_VLX1 - @radio_mlb_lib.RADIO_MLB	10C7
WLAN_TCK	WLAN_TCK - @radio_mlb_lib.RADIO_MLB	7D5 10C5
WLAN_TDI	WLAN_TDI - @radio_mlb_lib.RADIO_MLB	7D5 10B5
WLAN_TDO	WLAN_TDO - @radio_mlb_lib.RADIO_MLB	7D5 10C5
WLAN_TMS	WLAN_TMS - @radio_mlb_lib.RADIO_MLB	7D5 10C5
WLAN_TRST_N	WLAN_TRST_N - @radio_mlb_lib.RADIO_MLB	7D5 10C5
WLAN_VDDIO_1V8	WLAN_VDDIO_1V8 - @radio_mlb_lib.RADIO_MLB	10A5 10D6
WL_BT_REG_ON	WL_BT_REG_ON - @radio_mlb_lib.RADIO_MLB	7B8 7C2 7C5 10C8
WL_BT_VDDIO	WL_BT_VDDIO -	5B8 7B8 10A8 10D4

	@radio_mlb_lib.RADIO_MLB	
WL_BT_VDDIO_FILT_TCX	WL_BT_VDDIO_FILT_TCXO -	10A7
O	@radio_mlb_lib.RADIO_MLB	
XO_GND	XO_GND - @radio_mlb_lib.RADIO_MLB	5C4 5C5
XO_OUT	XO_OUT - @radio_mlb_lib.RADIO_MLB	9B2
XO_OUT_A0	XO_OUT_A0 -	5C2 9B1
	@radio_mlb_lib.RADIO_MLB	
XO_OUT_D1	XO_OUT_D1 -	2C3 5C2 7B5
	@radio_mlb_lib.RADIO_MLB	
XO_OUT_D1_EN	XO_OUT_D1_EN -	2C3 5C2
	@radio_mlb_lib.RADIO_MLB	
XO_THERM	XO_THERM - @radio_mlb_lib.RADIO_MLB	5C4
XTAL19M_IN	XTAL19M_IN -	5D4
	@radio_mlb_lib.RADIO_MLB	
XTAL19M_OUT	XTAL19M_OUT -	5D4
	@radio_mlb_lib.RADIO_MLB	

Title: Cref Part Report
Design: radio_mlb
Date: Dec 17 16:28:43 2010

BR1	BRACKET_1P_SM	radio_mlb[8C8]
BR2	BRACKET_1P_SM	radio_mlb[8B8]
C1	CAP_0201-MUR	radio_mlb[7D3]
C2	CAP_201	radio_mlb[5A8]
C3	CAP_201	radio_mlb[8B3]
C4	CAP_201	radio_mlb[8B3]
C5	CAP_201	radio_mlb[8A6]
C6	CAP_201	radio_mlb[8B6]
C7	CAP_402	radio_mlb[10A8]
C8	CAP_01005	radio_mlb[10A7]
C9	CAP_201	radio_mlb[8A5]
C10	CAP_201	radio_mlb[5B6]
C12	CAP_201	radio_mlb[10A6]
C13	CAP_201	radio_mlb[8C6]
C14	CAP_01005	radio_mlb[9C7]
C15	CAP_201	radio_mlb[9D8]
C16	CAP_201	radio_mlb[8C6]
C17	CAP_201	radio_mlb[9D8]
C18	CAP_201	radio_mlb[7A7]
C19	CAP_201	radio_mlb[8C5]
C20	CAP_201	radio_mlb[8C4]
C21	CAP_201	radio_mlb[8C4]
C22	CAP_201	radio_mlb[8C4]
C23	CAP_01005	radio_mlb[6C7]
C24	CAP_01005	radio_mlb[8C3]
C25	CAP_01005	radio_mlb[8C3]
C26	CAP_01005	radio_mlb[9B7]
C27	CAP_201	radio_mlb[9D6]
C28	CAP_01005	radio_mlb[9B7]
C29	CAP_201	radio_mlb[9D7]
C30	CAP_01005	radio_mlb[9C7]
C32	CAP_01005	radio_mlb[9B7]
C33	CAP_01005	radio_mlb[9C6]
C34	CAP_01005	radio_mlb[9D6]
C35	CAP_201	radio_mlb[9C6]
C36	CAP_01005	radio_mlb[10A7]
C37	CAP_201	radio_mlb[9D6]
C38	CAP_01005	radio_mlb[9C5]
C39	CAP_01005	radio_mlb[9D5]
C40	CAP_201	radio_mlb[9C5]
C41	CAP_201	radio_mlb[9D5]
C42	CAP_201	radio_mlb[9C5]
C43	CAP_01005	radio_mlb[9B5]
C44	CAP_201	radio_mlb[9D5]
C45	CAP_201	radio_mlb[9C5]
C46	CAP_0201	radio_mlb[9D4]
C47	CAP_402-LF	radio_mlb[9C5]
C48	CAP_402-LF	radio_mlb[9D5]
C49	CAP_0201	radio_mlb[9A4]
C50	CAP_0201	radio_mlb[9A4]
C51	CAP_201	radio_mlb[9B4]
C52	CAP_201	radio_mlb[9D4]
C53	CAP_201	radio_mlb[9D3]
C54	CAP_201	radio_mlb[9C3]
C55	CAP_201	radio_mlb[9A2]
C56	CAP_0402	radio_mlb[6D8]
C57	CAP_0402	radio_mlb[6C8]
C58	CAP_0201	radio_mlb[8C8]
C59	CAP_201	radio_mlb[9D1]
C60	CAP_402	radio_mlb[9D1]
C61	CAP_201	radio_mlb[8C2]
C65	CAP_201	radio_mlb[9C2]
C66	CAP_201	radio_mlb[3C5]
C67	CAP_603	radio_mlb[10D7]
C68	CAP_201	radio_mlb[10D7]
C69	CAP_201	radio_mlb[10D6]
C70	CAP_201	radio_mlb[10D5]
C71	CAP_0201	radio_mlb[8C7]
C72	CAP_0201	radio_mlb[8D7]
C79	CAP_201	radio_mlb[10A8]
C81	CAP_201	radio_mlb[7A7]
C82	CAP_201	radio_mlb[7A7]
C83	CAP_201	radio_mlb[7A7]
C85	CAP_201	radio_mlb[9D2]
C86	CAP_402	radio_mlb[10C7]
C87	CAP_201	radio_mlb[8B7]
C88	CAP_201	radio_mlb[8A7]
C89	CAP_201	radio_mlb[8A7]
C90	CAP_01005	radio_mlb[2B5]
C103	CAP_201	radio_mlb[2D4]
C104	CAP_01005	radio_mlb[2B5]
C105	CAP_01005	radio_mlb[2B5]
C106	CAP_201	radio_mlb[2B3]
C107	CAP_0201	radio_mlb[3D2]
C108	CAP_0201	radio_mlb[3D2]
C109	CAP_0201	radio_mlb[3D2]
C110	CAP_0201	radio_mlb[3D2]
C111	CAP_201	radio_mlb[6B7]
C112	CAP_201	radio_mlb[6B7]
C113	CAP_201	radio_mlb[6B7]
C114	CAP_402-LF	radio_mlb[6A7]
C115	CAP_402-LF	radio_mlb[6A7]
C116	CAP_201	radio_mlb[6A7]
C117	CAP_01005	radio_mlb[6D6]
C118	CAP_01005	radio_mlb[6D6]
C119	CAP_01005	radio_mlb[6C7]
C120	CAP_01005	radio_mlb[6C6]
C121	CAP_01005	radio_mlb[6C7]
C122	CAP_01005	radio_mlb[6D7]
C124	CAP_01005	radio_mlb[6D7]
C125	CAP_603	radio_mlb[5C8]
C126	CAP_603	radio_mlb[6D2]
C127	CAP_0201	radio_mlb[4C4]
C128	CAP_0201	radio_mlb[4B4]
C129	CAP_0201	radio_mlb[4B4]
C130	CAP_0201	radio_mlb[4B4]
C131	CAP_0201	radio_mlb[4A4]
C132	CAP_0201	radio_mlb[4A4]
C133	CAP_0201	radio_mlb[4A2]
C134	CAP_0201	radio_mlb[4B2]
C135	CAP_0402	radio_mlb[6C1]
C136	CAP_01005	radio_mlb[5C8]
C137	CAP_0201	radio_mlb[4B1]
C138	CAP_0201	radio_mlb[4B1]
C139	CAP_0201	radio_mlb[4B1]
C140	CAP_201	radio_mlb[6B5]
C141	CAP_603	radio_mlb[6B6]
C142	CAP_603	radio_mlb[6B6]
C143	CAP_603	radio_mlb[6B6]
C144	CAP_603	radio_mlb[6B5]
C145	CAP_402	radio_mlb[6B6]
C146	CAP_201	radio_mlb[6A6]
C147	CAP_201	radio_mlb[6A6]
C148	CAP_402	radio_mlb[6D4]
C149	CAP_01005	radio_mlb[5C8]
C150	CAP_603	radio_mlb[6D2]
C151	CAP_201	radio_mlb[6D2]
C152	CAP_603	radio_mlb[6C3]
C153	CAP_201	radio_mlb[9D6]
C154	CAP_603	radio_mlb[6C3]
C155	CAP_201	radio_mlb[9C6]
C157	CAP_603	radio_mlb[6C3]
C159	CAP_603	radio_mlb[6B3]
C160	CAP_402	radio_mlb[6A1]
C161	CAP_402	radio_mlb[6A4]
C162	CAP_402	radio_mlb[6A4]
C163	CAP_402	radio_mlb[6A3]
C166	CAP_402-LF	radio_mlb[6A2]
C167	CAP_402	radio_mlb[6A3]
C168	CAP_402-LF	radio_mlb[6A2]
C169	CAP_402	radio_mlb[6A2]
C170	CAP_402	radio_mlb[6A2]
C171	CAP_01005	radio_mlb[5C4]
C172	CAP_402	radio_mlb[6A2]
C174	CAP_01005	radio_mlb[5C5]
C178	CAP_402-LF	radio_mlb[6A4]
C179	CAP_01005	radio_mlb[6D5]
C180	CAP_201	radio_mlb[6D4]
C181	CAP_01005	radio_mlb[6C6]
C182	CAP_0201	radio_mlb[6C5]
C183	CAP_01005	radio_mlb[6D5]
C184	CAP_01005	radio_mlb[6D4]
C187	CAP_201	radio_mlb[9C8]
C188	CAP_01005	radio_mlb[6C5]
C189	CAP_201	radio_mlb[6D4]
C200	CAP_402	radio_mlb[6C6]
C201	CAP_402-1	radio_mlb[6D7]
C202	CAP_402	radio_mlb[6C7]
C203	CAP_402-1	radio_mlb[6C7]
C204	CAP_402	radio_mlb[6D6]
C205	CAP_402-1	radio_mlb[6C7]
C206	CAP_402	radio_mlb[6B7]
C217	CAP_01005	radio_mlb[9B2]
C225	CAP_201	radio_mlb[8C5]
FL1	MOD_HFQTP4ZEA047_LGA	radio_mlb[8B5]
FL2	FILTER_SAFFB1G88AA0F 57_LLP	radio_mlb[9D7]
FL3	FILTER_SAFEB1G57FM_L LP	radio_mlb[8C4]
FL4	FIL_LDM18_0603	radio_mlb[9A6]
FL5	FILTER_SAFEA836MAA0F 57_LLP	radio_mlb[9C8]
FL6	FILTER_2P_0201-1	radio_mlb[7A7]
FL7	FILTER_6P1_LLP	radio_mlb[9C2]
FL9	FILTER_2P_0201	radio_mlb[7A7]
FL10	FILTER_3P1_0805-SM	radio_mlb[10D4]
FL11	FILTER_2P_0402	radio_mlb[6C1]
FL12	FILTER_2P_0402	radio_mlb[6C1]
FL13	FILTER_2P_0402	radio_mlb[6C1]
FL14	FILTER_2P_0402	radio_mlb[6C1]
FL15	FILTER_2P_0402	radio_mlb[6B1]
G1	OSC_4PIN_ST_2.1X1.7X 0.8-SM	radio_mlb[10A7]
J1	CON_M40ST_D4MT_SM1_M -ST-SM	radio_mlb[7C3]
J2	CON_F1ST_COAX_S3MT_S M_F-ST-SM	radio_mlb[10D3]
J3	CON_F1ST_COAX_S3MT_S M_F-ST-SM	radio_mlb[8D6]
J4	CON_F1ST_COAX_S3MT_S M_F-ST-SM	radio_mlb[9D1]
J5	CON_F1ST_COAX_S3MT_S M_F-ST-SM	radio_mlb[8B8]
J6	CON_F2ST_COAX_2MT_SM 2_F-ST-SM	radio_mlb[9C1]
J9	CON_F2ST_COAX_2MT_SM 2_F-ST-SM	radio_mlb[8B6]
J14	CON_F4ST_S2MT_SM_F-S T-SM	radio_mlb[7A8]
L1	IND_0201	radio_mlb[8A3]
L2	IND_0201	radio_mlb[8B3]
L3	IND_0201	radio_mlb[8A2]
L4	IND_0201	radio_mlb[8B2]
L5	IND_VLS3012-SM-HF	radio_mlb[6D2]
L6	IND_0201	radio_mlb[8C2]
L7	IND_0201	radio_mlb[8C2]
L8	IND_0201	radio_mlb[9C5]
L9	IND_0201	radio_mlb[9D5]
L10	IND_0201	radio_mlb[9B7]
L11	IND_0201	radio_mlb[9A5]
L12	IND_0201	radio_mlb[9B6]
L13	IND_0201	radio_mlb[9A4]
L14	IND_0201	radio_mlb[9B4]
L15	IND_0201	radio_mlb[9B4]
L16	IND_0201	radio_mlb[9D3]
L17	IND_0201	radio_mlb[9B4]
L18	IND_0201	radio_mlb[9B4]
L19	IND_0201	radio_mlb[9B3]
L20	IND_0201	radio_mlb[9B3]
L21	IND_03015	radio_mlb[8D7]
L22	IND_0201	radio_mlb[9C2]
L23	IND_0201	radio_mlb[9C1]
L24	CAP_201	radio_mlb[10C4]
L25	IND_0201	radio_mlb[6C8]
L26	IND_0201	radio_mlb[6D6]
L27	IND_0201	radio_mlb[6C7]
L28	IND_0201	radio_mlb[6D7]
L29	IND_0201	radio_mlb[6D6]
L30	IND_0201	radio_mlb[6D5]
L31	IND_0201	radio_mlb[6D8]
L32	IND_03015	radio_mlb[8C7]
L33	IND_VLS2012E-SM	radio_mlb[10C7]
L34	IND_402	radio_mlb[9D2]
L36	IND_0201	radio_mlb[6C7]
L37	IND_0201	radio_mlb[6D5]
L38	IND_0201	radio_mlb[9D8]
L39	IND_0201	radio_mlb[9D6]
L40	IND_0201	radio_mlb[9C7]
L41	IND_0201	radio_mlb[8A3]
L42	IND_0201	radio_mlb[8A3]
L43	IND_0201	radio_mlb[9C7]
L44	IND_0201	radio_mlb[9B8]
L50	IND_0201	radio_mlb[6D8]
L54	IND_0201	radio_mlb[8C5]
L60	IND_03015	radio_mlb[8C6]
L61	IND_VLS2012E-SM	radio_mlb[6C3]
L62	IND_VLS2012E-SM	radio_mlb[6C3]
L63	IND_VLS2012E-SM	radio_mlb[6C3]
L64	IND_VLS2012E-SM	radio_mlb[6B3]
PP1	PROBEPOINT_SM	radio_mlb[7C5]
PP2	PROBEPOINT_SM	radio_mlb[7C5]
PP3	PROBEPOINT_SM	radio_mlb[7C5]
PP4	PROBEPOINT_SM	radio_mlb[7B5]
PP7	PROBEPOINT_SM	radio_mlb[7D5]
PP8	PROBEPOINT_SM	radio_mlb[7D5]
PP9	PROBEPOINT_SM	radio_mlb[7D5]
PP10	PROBEPOINT_SM	radio_mlb[7D5]
PP11	PROBEPOINT_SM	radio_mlb[7D5]
PP12	PROBEPOINT_SM	radio_mlb[7C5]
PP13	PROBEPOINT_SM	radio_mlb[7C5]
PP14	PROBEPOINT_SM	radio_mlb[7D5]
PP15	PROBEPOINT_SM	radio_mlb[7B5]
PP16	PROBEPOINT_SM	radio_mlb[7B5]
PP17	PROBEPOINT_SM	radio_mlb[7B5]
PP18	PROBEPOINT_SM	radio_mlb[7B5]
PP24	PROBEPOINT_SM	radio_mlb[7B4]
PP25	PROBEPOINT_SM	radio_mlb[7B4]
PP26	PROBEPOINT_SM	radio_mlb[7B4]
PP30	PROBEPOINT_SM	radio_mlb[7B3]
PP31	PROBEPOINT_SM	radio_mlb[7A3]
PP40	PROBEPOINT_SM	radio_mlb[7B2]
PP41	PROBEPOINT_SM	radio_mlb[7B2]
PP42	PROBEPOINT_SM	radio_mlb[7B2]
PP43	PROBEPOINT_SM	radio_mlb[7B2]
PP44	PROBEPOINT_SM	radio_mlb[7B2]
PP45	PROBEPOINT_SM	radio_mlb[7A2]
PP46	PROBEPOINT_SM	radio_mlb[7A2]
PP47	PROBEPOINT_SM	radio_mlb[7A2]
PP52	PROBEPOINT_SM	radio_mlb[2B6]
PP53	PROBEPOINT_SM	radio_mlb[2B6]
PP58	PROBEPOINT_SM	radio_mlb[2B8]
PP71	PROBEPOINT_SM	radio_mlb[2C4]
PP72	PROBEPOINT_SM	radio_mlb[2C4]
PP73	PROBEPOINT_SM	radio_mlb[2C4]
Q1	TRA_MOSFET_NCHN_3P_S OT883L	radio_mlb[5B7]
R1	RES_201	radio_mlb[3B2]
R2	RES_201	radio_mlb[2D4]
R3	RES_201	radio_mlb[2D4]
R4	RES_201	radio_mlb[2C4]
R5	RES_402	radio_mlb[6D4]
R6	RES_01005	radio_mlb[2A4]
R7	RES_01005	radio_mlb[2A4]
R8	RES_01005	radio_mlb[2A4]
R9	RES_201	radio_mlb[6D2]
R10	RES_01005	radio_mlb[9D6]
R11	RES_201	radio_mlb[10A8]
R12	RES_01005	radio_mlb[9A2]
R13	RES_201	radio_mlb[9A1]
R14	RES_201	radio_mlb[9A1]
R15	RES_201	radio_mlb[9A1]
R16	RES_01005	radio_mlb[2C6]
R17	RES_01005	radio_mlb[2C6]
R18	RES_01005	radio_mlb[10A3]
R19	RES_01005	radio_mlb[7D3]
R20	RES_201	radio_mlb[5B7]
R24	RES_01005	radio_mlb[2B2]
R28	RES_01005	radio_mlb[2B5]
R29	RES_01005	radio_mlb[2B5]
R30	RES_01005	radio_mlb[2B3]
R31	RES_01005	radio_mlb[2A7]
R32	RES_01005	radio_mlb[2A7]
R33	RES_01005	radio_mlb[2A7]
R34	RES_01005	radio_mlb[2A7]
R36	RES_01005	radio_mlb[2A7]
R37	RES_01005	radio_mlb[2A7]
R38	RES_01005	radio_mlb[2A7]
R39	RES_01005	radio_mlb[2A7]
R40	RES_01005	radio_mlb[2A7]
R41	RES_01005	radio_mlb[2A7]
R43	RES_201	radio_mlb[6B8]
R44	RES_201	radio_mlb[6B8]
R45	RES_201	radio_mlb[6B8]
R46	RES_201	radio_mlb[6A8]
R47	RES_201	radio_mlb[6A8]
R48	RES_201	radio_mlb[6A8]
R49	RES_201	radio_mlb[6D7]
R51	IND_0201	radio_mlb[6C8]
R55	IND_0201	radio_mlb[6C8]
R58	THERMISTER_0201	radio_mlb[5C4]
R59	RES_01005	radio_mlb[5C5]
R60	RES_201	radio_mlb[6D2]
R61	RES_201	radio_mlb[9C8]
R62	RES_01005	radio_mlb[2C8]
R63	RES_01005	radio_mlb[2C8]
R68	RES_201	radio_mlb[6B1]
R69	RES_201	radio_mlb[6B1]
R70	RES_201	radio_mlb[6B1]
R72	RES_201	radio_mlb[6B1]
R76	RES_201	radio_mlb[6A1]
R81	RES_01005	radio_mlb[3C8]
R82	RES_201	radio_mlb[4C4]
R83	RES_201	radio_mlb[6A1]
R86	RES_201	radio_mlb[4C4]
R93	RES_201	radio_mlb[4C4]
R97	RES_201	radio_mlb[6C6]
R98	RES_201	radio_mlb[6C6]
R101	RES_01005	radio_mlb[3B5]
R102	RES_01005	radio_mlb[3C5]
R103	RES_01005	radio_mlb[3C5]
R104	RES_201	radio_mlb[10D5]
R106	RES_01005	radio_mlb[10A5]
R107	RES_01005	radio_mlb[10A5]
R108	RES_01005	radio_mlb[10A3]
R109	RES_201	radio_mlb[10D4]
R110	RES_201	radio_mlb[9D8]
R185	RES_201	radio_mlb[9C8]
SP1	SPRING_CLIP_1P_CLIP- SM	radio_mlb[8D8]
TP1	TP_TP-P6	radio_mlb[7A5]
TP2	TP_TP-P6	radio_mlb[7B4]
TP3	TP_TP-P6	radio_mlb[7A4]
TP4	TP_TP-P6	radio_mlb[7A4]
TP5	TP_TP-P6	radio_mlb[7A4]
TP7	TP_TP-P6	radio_mlb[7B3]
TP8	TP_TP-P6	radio_mlb[7B3]
TP10	TP_TP-P6	radio_mlb[7A4]
TP11	TP_TP-P6	radio_mlb[7B3]
TP12	TP_TP-P6	radio_mlb[7A3]
TP13	TP_TP-P6	radio_mlb[7A3]
TP14	TP_TP-P6	radio_mlb[7A3]
TP22	TP_TP-P6	radio_mlb[7B3]
TP33	TP_TP-P6	radio_mlb[7B5]
TP34	TP_TP-P6	radio_mlb[7B5]
U1	BGA486_CUSTOM_N92_BG A	radio_mlb[2D7 2D3]
U1	BGA486_CUSTOM_N92_BG A	radio_mlb[3D7]
U1	BGA486_CUSTOM_N92_BG A	radio_mlb[4C3 4D6 4C7]
U1	BGA486_CUSTOM_N92_BG A	radio_mlb[9B2]
U2	SDRAM_EEPROM_4MX16X4 _130BGA_TFBGA	radio_mlb[3D4]
U3	PWRMGR_EU_BGA136_BGA	radio_mlb[5B3 5D3 5B6 5D7]
U3	PWRMGR_EU_BGA136_BGA	radio_mlb[6C5]
U4	SN74LVC1G11_BGA	radio_mlb[2C4]
U5	MAX8839L_WLP	radio_mlb[6D3]
U6	AMP_SKY77710_LLP	radio_mlb[9C6]
U7	AMP_SKY77711_LLP	radio_mlb[9D5]
U8	FIL_SAYRF836MCA0F57_ LGA	radio_mlb[9C4]
U9	FIL_ACMD7410_2.0X2.5 MM	radio_mlb[9D4]
U10	SN74AUC1G32_BGA-YZP	radio_mlb[3C5]
U11	74LVC1G04_SOT891	radio_mlb[5B8]
U12	MOD_WIFI_BT_UNO_LGA5 5_LGA	radio_mlb[10C7]
U13	FPF1039_CSP	radio_mlb[7D2]
U33	XM1500LB_QFN	radio_mlb[8C5]
XW1	SHORT10L25_WITH_ALTS _SM	radio_mlb[7A6]
XW2	SHORT_SM	radio_mlb[6C3]
XW3	SHORT_SM	radio_mlb[6C3]
XW4	SHORT_SM	radio_mlb[6C3]
XW5	SHORT_SM	radio_mlb[6B3]
XW6	SHORT_SHORT-0201	radio_mlb[10D7]
XW7	SHORT10LP25_WITH_ALT S_SHORT-10L-0.25MM-S M	radio_mlb[5C3]
XW9	SHORT_SM	radio_mlb[10C7]
XW10	SHORT_SM	radio_mlb[10C7]
XW11	SHORT_SM	radio_mlb[10B7]
XW12	SHORT_SM	radio_mlb[10B7]
XW13	SHORT_SM	radio_mlb[10B7]
XW14	SHORT_SM	radio_mlb[10B7]
Y1	CRYSTAL_4PIN_SM-2.5X 2.0MM	radio_mlb[5D4]

1. ALL RESISTANCE VALUES ARE IN OHMS, 0.1 WATT +/- 5%.
2. ALL CAPACITANCE VALUES ARE IN MICROFARADS.
3. ALL CRYSTALS & OSCILLATOR VALUES ARE IN HERTZ.

REV	ECN	DESCRIPTION OF REVISION	CK APPD / DATE
			2010-12-22

I BLEW UP 2 ASHLEYS, CYA IN CASE THE N88 AMANDA BUG IS BACK

LAYOUT: PLACE XW1 AND XW2 REMOTELY BY AP

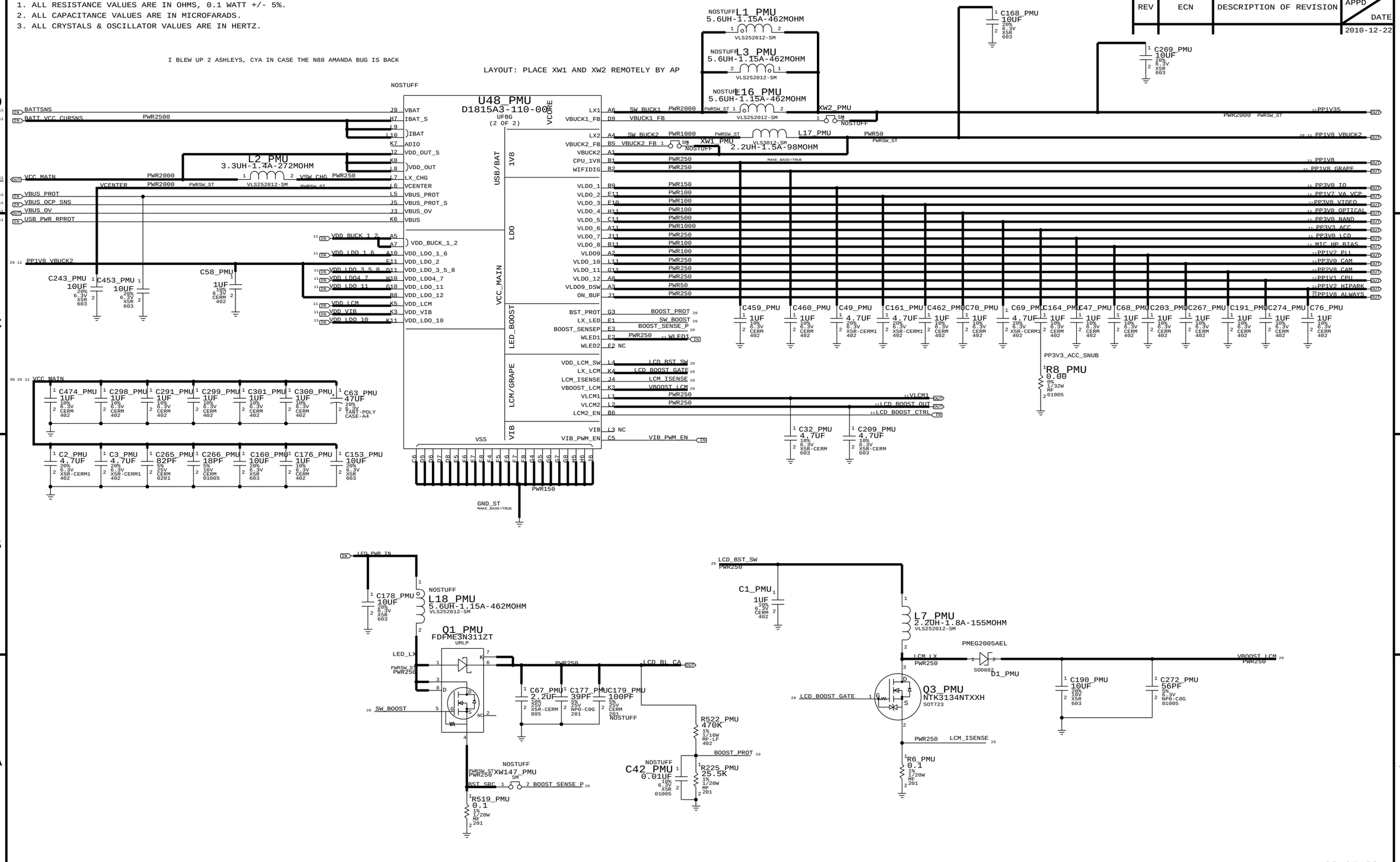

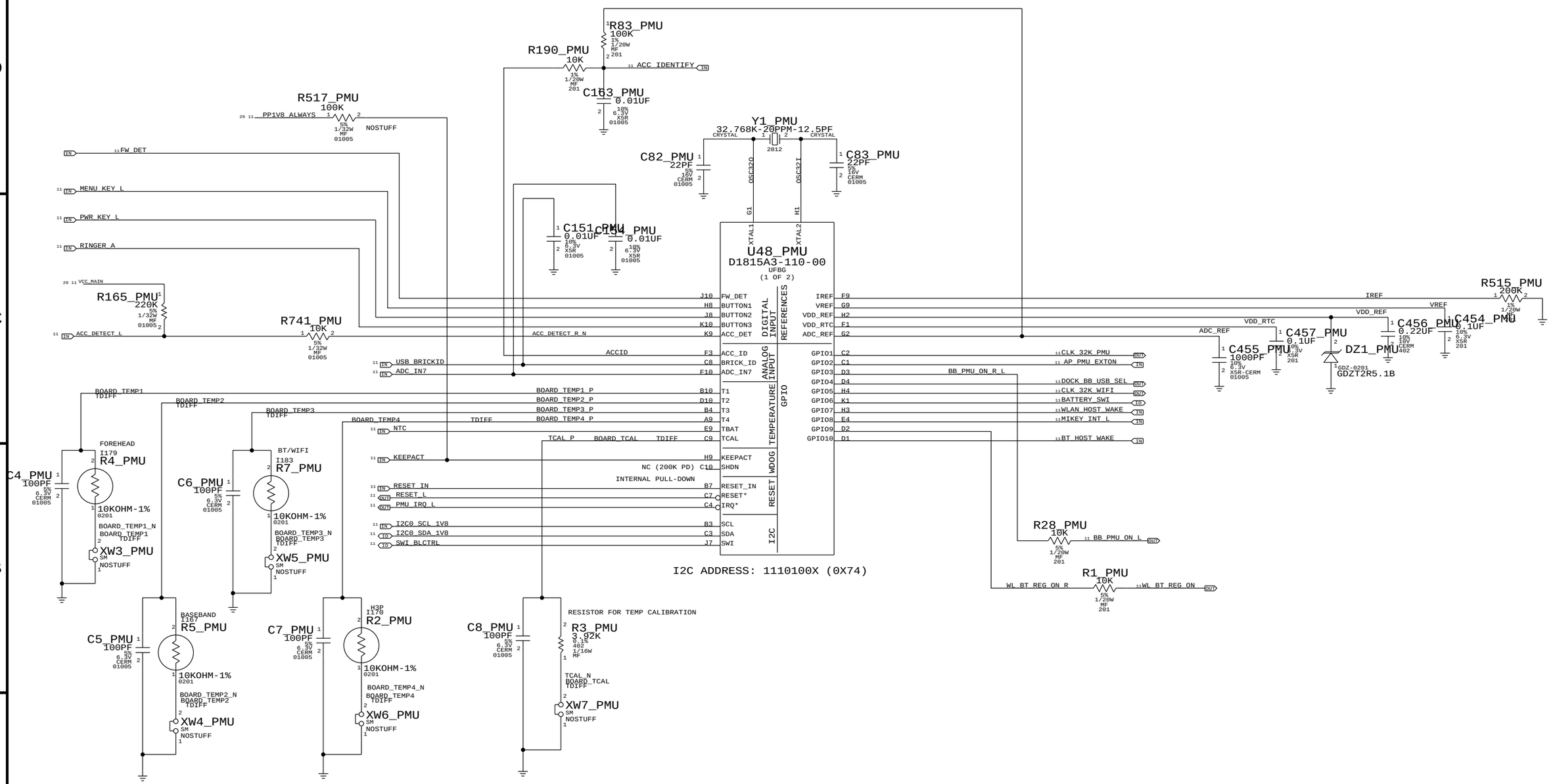
R83_PMU
100K
R190_PMU
10K
ACC_IDENTIFY
C163_PMU
0.01UF
R517_PMU
100K
PP1V8_ALWAYS
NOSTUFF
Y1_PMU
32.768K-20PPM-12.5PF
CRYSTAL
C82_PMU
22PF
C83_PMU
22PF
OSC32O
OSC32I
C151_PMU
0.01UF
C154_PMU
0.01UF
U48_PMU
D1815A3-110-00
UFBG
(1 OF 2)
XTAL1
XTAL2
FW_DET
MENU_KEY_L
PWR_KEY_L
RINGER_A
VCC_MAIN
R165_PMU
220K
R741_PMU
10K
ACC_DETECT_L
ACC_DETECT_R_N
ACCID
USB_BRICKID
ADC_IN7
BUTTON1
BUTTON2
BUTTON3
ACC_DET
ACC_ID
BRICK_ID
ADC_IN7
DIGITAL INPUT
REFERENCES
ANALOG INPUT
IREF
VREF
VDD_REF
VDD_RTC
ADC_REF
R515_PMU
200K
C457_PMU
0.1UF
C456_PMU
0.22UF
C454_PMU
0.1UF
C455_PMU
1000PF
DZ1_PMU
GDZT2R5.1B
BOARD_TEMP1
BOARD_TEMP2
BOARD_TEMP3
BOARD_TEMP4
TDIFF
NTC
TCAL_P
BOARD_TCAL
TCAL
TBAT
TEMPERATURE
GPIO
GPIO1
GPIO2
GPIO3
GPIO4
GPIO5
GPIO6
GPIO7
GPIO8
GPIO9
GPIO10
CLK_32K_PMU
AP_PMU_EXTON
BB_PMU_ON_R_L
DOCK_BB_USB_SEL
CLK_32K_WIFI
BATTERY_SWI
WLAN_HOST_WAKE
MIKEY_INT_L
BT_HOST_WAKE
KEEPACT
NC (200K PD)
SHDN
INTERNAL PULL-DOWN
RESET_IN
RESET_L
PMU_IRQ_L
RESET*
IRQ*
RESET wDOG
I2C_SCL_1V8
I2C_SDA_1V8
SWI_BLCTRL
SCL
SDA
SWI
I2C
I2C ADDRESS: 1110100X (0X74)
R28_PMU
10K
BB_PMU_ON_L
R1_PMU
10K
WL_BT_REG_ON_R
WL_BT_REG_ON
FOREHEAD
R4_PMU
C4_PMU
100PF
10KOHM-1%
BOARD_TEMP1_N
XW3_PMU
BT/WIFI
R7_PMU
C6_PMU
100PF
BOARD_TEMP3_N
XW5_PMU
BASEBAND
R5_PMU
C5_PMU
100PF
BOARD_TEMP2_N
XW4_PMU
H3P
R2_PMU
C7_PMU
100PF
BOARD_TEMP4_N
XW6_PMU
RESISTOR FOR TEMP CALIBRATION
C8_PMU
100PF
R3_PMU
3.92K
TCAL_N
XW7_PMU
NOSTUFF
FILTER CAPS AND XW LINKS SHOULD BE PLACED NEAR PMU